Sussex County Council
Public/Media Packet

MEETING:
June 4, 2013

****DISCLAIMER****

This product is provided by Sussex County government as a courtesy to the general public. Items contained within are for background purposes only, and are presented 'as is'. Materials included are subject to additions, deletion or other changes prior to the County Council meeting for which the package is prepared.

Sussex County Council
2 The Circle | PO Box 589
Georgetown, DE 19947
(302) 855-7743

MICHAEL H. VINCENT, PRESIDENT
SAMUEL R. WILSON JR., VICE PRESIDENT
GEORGE B. COLE
JOAN R. DEAVER
VANCE PHILLIPS

2 THE CIRCLE | PO BOX 589
GEORGETOWN, DE 19947
(302) 855-7743 T
(302) 855-7749 F
sussexcountyde.gov

Sussex County Council

A G E N D A

JUNE 4, 2013

10:00 A.M.

Call to Order

Approval of Agenda

Approval of Minutes

Reading of Correspondence

Todd Lawson, County Administrator

1. **Employee of the Quarter – Mary Sue Sharp**
2. **Administrator's Report**

Hal Godwin, Deputy County Administrator

1. **Wastewater Agreements**
   - **A. Warrington Creek – Phase 9 (AKA Sawgrass)**
   - **B. Seagrass Plantation – Revision 2, Phase 4**
2. **Legislative Update**

Julie Cooper, Project Engineer

1. **Greenwood Library Project 07-05**
   - **A. Change Order No. 1**

EQUAL HOUSING OPPORTUNITY

10:30 a.m. Public Hearings

"AN ORDINANCE TO AMEND CHAPTER 52, § 52-1 OF THE CODE OF SUSSEX COUNTY TO ADOPT THE BUILDING CONSTRUCTION STANDARDS IN THE INTERNATIONAL BUILDING CODE 2012 EDITION AND THE INTERNATIONAL RESIDENTIAL CODE 2012 EDITION, WITH EXEMPTIONS"

Change of Zone No. 1728 filed on behalf of Lighthouse Carillon, LLC
"AN ORDINANCE TO AMEND THE COMPREHENSIVE ZONING MAP OF SUSSEX COUNTY FROM AN AR-1 AGRICULTURAL RESIDENTIAL DISTRICT TO A CR-1 COMMERCIAL RESIDENTIAL DISTRICT FOR A CERTAIN PARCEL OF LAND LYING AND BEING IN INDIAN RIVER HUNDRED, SUSSEX COUNTY, CONTAINING 2.81829 ACRES, MORE OR LESS" (Tax Map I.D. 2-34-23.00-Part of Parcels 260.00 and 269.18)

CANCELLED: "**AN ORDINANCE TO REPEAL CHAPTER 80, "LOT MAINTENANCE," § 80-3 IN ITS ENTIRETY AND AMEND CHAPTER 115, ARTICLE XXV, "SUPPLEMENTARY REGULATIONS," §§ 115-191.4 AND 115-191.5 OF THE CODE OF SUSSEX COUNTY BY INCLUDING IN § 115-191.4 MINIMUM STANDARDS FOR LOT MAINTENANCE PERTAINING TO PROHIBITED ACCUMULATIONS OF OVERGROWN GRASS AND WEEDS AND TO INCLUDING FAILURE TO COMPLY WITH THE MINIMUM LOT MAINTENANCE STANDARDS PROHIBITING OVERGROWN GRASS AND WEEDS IN THE PENALTY AND ENFORCEMENT PROVISIONS OF § 115-191.5"**

Grant Requests

1. **Cape Henlopen High School to sponsor After-Graduation Party**

2. **Cats Around Town Society for the spay/neuter program**

Introduction of Proposed Zoning Ordinances

Any Additional Business Brought Before Council

Executive Session – Pending/Potential Litigation, and Land Acquisition pursuant to 29 Del. C. §10004(b)

Possible Action on Executive Session Items

****

Sussex County Council meetings can be monitored on the internet at www.sussexcountyde.gov.

****

In accordance with 29 Del. C. §10004(e)(2), this Agenda was posted on May 28, 2013 at 4:30 p.m., and at least seven (7) days in advance of the meeting.

This Agenda was prepared by the County Administrator and is subject to change to include the addition or deletion of items, including Executive Sessions, which arise at the time of the Meeting.

Agenda items listed may be considered out of sequence.

# # # #

SUSSEX COUNTY COUNCIL - GEORGETOWN, DELAWARE, MAY 7, 2013

A regularly scheduled meeting of the Sussex County Council was held on Tuesday, May 7, 2013, at 10:00 a.m., in the Council Chambers, Sussex County Administrative Office Building, Georgetown, Delaware, with the following present:

Michael H. Vincent	**President**
Samuel R. Wilson, Jr.	**Vice President**
George B. Cole	**Councilman**
Joan R. Deaver	**Councilwoman**
Vance Phillips	**Councilman**
Todd F. Lawson	**County Administrator**
Gina A. Jennings	**Finance Director**
Everett Moore	**County Attorney**

The Invocation and Pledge of Allegiance were led by Mr. Vincent.

Call to Order

Mr. Vincent called the meeting to order.

M 229 13 Amend and Approve Agenda

A Motion was made by Mr. Wilson, seconded by Mr. Phillips, to amend the Agenda by deleting "Executive Session" and "Possible Action on Executive Session Items"; and to approve the Agenda, as amended.

Motion Adopted: 5 Yeas.

Vote by Roll Call: Mrs. Deaver, Yea; Mr. Cole, Yea; Mr. Phillips, Yea; Mr. Wilson, Yea; Mr. Vincent, Yea

Corre-spondence

Mrs. Deaver shared that the Selbyville Public Library is having a dedication of its Selbyville Oral History Collection, May 19, 2013, honoring the families and descendants of those who participated in recording their personal histories.

Mrs. Deaver shared a book she received called "Homeowners Handbook to Prepare for Natural Hazards" which is published by the Delaware Sea Grant College Program.

Mr. Cole shared a thank you letter from the Henlopen Senior Center for the funds requested for building repairs.

Presentation of Memorial Poppies

Cindy Phillips was in attendance on behalf of the American Legion Auxiliary Post #28 to present poppies to the Council. Mrs. Phillips shared that since World War I the Memorial Poppy has come to symbolize the lives that have been given in service to this Country. From a poem to a program, the poppy that is handmade by veterans, has become the means by which we remember and honor our veterans. The funds that are donated for

DRAFT

Presentation (continued)

poppies assist the hospitalized and disabled veterans in the local area.

In closing, Mrs. Phillips shared the poem "In Flanders Field".

Advisory Committee Update- Sussex County- Live Conference

Sally Beaumont, member of the Advisory Committee on Aging and Adults with Physical Disabilities for Sussex County, presented an update on the "Sussex County Live Conference".

Ms. Beaumont introduced, Scott Phillips (Mr. Phillips' District), Fran Smith (Mr. Wilson's District), Jamie Magee & Penny Orndorff (Mr. Cole's District) and Larry Savage (Mrs. Deaver's District) and shared that the Committee has had a renewal of energy not only with the new members but with the interest of over 40 new agencies that have been attending their meetings and want to be involved.

The Committee is in the planning stages of holding their first conference – Sussex County Council Live Conference: Live Healthy…Live Active…Live at Home and would like the help and participation of the Council.

This conference will be held on October 9, 2013, 9 a.m. – 4 p.m., at the CHEER Center in Georgetown and the fee to attend the conference is $5.00 per person. Bill Love, Executive Director for the Division on Aging and Persons with Disabilities, will be the keynote speaker sharing about the political act and what affect the new health care delivery will have on individuals as of January 1, 2014.

Scott Phillips shared the results of the survey, "Interest in a Coalition", conducted by the Advisory Committee on Aging & Adults with Physical Disabilities for Sussex County. The results of this survey can be found in the March 19, 2013 minutes for the Advisory Committee on Aging and Adults with Physical Disabilities on the Sussex County website.

Presentation of the Sea Level Rise Update

Susan Love, Planner IV, Delaware Coastal Programs presented an update from the Sea Level Rise Committee, "Preparing for Tomorrow's High Tide: Status of Delaware's Sea Level Rise Adaption Plan".

The Sea Level Rise Advisory Committee is to assess Delaware's vulnerability to current and future inundation problems that may be exacerbated by sea level rise and to develop a set of recommendations for state agencies, local governments, businesses and citizens to enable them to adapt programs, policies, business practices and make informed decisions. In the update provided Ms. Love shared the following information.

Impact from sea level rise (SLR)

- **Short-term**
  - **Increased extent of flooding and damage during storms**
  - **Reduced drainage capacity in tidal areas**

DRAFT

Sea Level Rise Presentation (continued)

- **Infrastructure damage**

- **Longer-term**
  - **Conversion of land to open water**
  - **Reduced operability septic systems, wells and wastewater infrastructure**
  - **Saltwater intrusion/Water table**

- **Economic, Social, Environmental Impacts statewide**

Vulnerability Assessment: Results

- **Potentially Inundated**
  - **8-11% Total Land Area**
    - **Tax Assessed value $1.5 B**

  - **Direct effects in all counties and 31 towns**

- **Of highest concern statewide:**
  - **Industrial Areas and Port**
  - **Railroads, roads and evacuation**
  - **Dams and Dikes**
  - **Future development areas**
  - **Tourism/coastal recreation**
  - **Habitats and protected lands**
  - **Wells**

A Range of Adaptation Responses
- **Avoid**
- **Retreat**
- **Accommodate**
- **Protect**

A Sea Level Rise Adaption Plan for Delaware

- **Will inform, not dictate, local responses**
  - **Explains types of adaptation responses**
  - **Guiding Principles**
  - **Case Studies**
  - **Resources and Assistance**

- **Will recommend actions to increase "Adaptive Capacity" in Delaware**

Recommended Actions fall under one of these 7 categories

- **Improve Coordination and Communication**
- **Provide Increased Regulatory Flexibility**

DRAFT

Sea Level Rise Presentation (continued)

- **Provide Consistent Policies for Future Growth**
- **Increase Public Awareness**
- **Improve Sea Level Rise Data**
- **Provide Technical Assistance**
- **Expand Funding Opportunities**

Highlights: Improve Data Sets

- **Model stormwater, storm surge and SLR together**
- **Develop groundwater and saltwater intrusion models**
- **Install more tide and stream gauges**
- **Improve monitoring of SLR conditions and improve predictions for timing**
- **Monitor wetlands**

Highlights: Technical Assistance and Coordination Actions

- **Incorporate SLR into regional planning efforts**
- **Improve permitting process between different levels of government**
- **Technical assistance to agencies, counties and municipal governments**
- **Best management practices manual**

Highlights: Regulatory Flexibility

- **Incorporation of SLR into existing regs**
  - **Septic & Wells**
  - **Coastal Zone Act**
  - **Tidal wetlands**
- **Executive Order for state agencies**
- **Regulatory incentives**
- **Expand community septic system to individual homes**
- **Early permitting for infrastructure**

Highlights: Consistent Policies and Outreach Actions

- **Incorporate SLR into**
  - **Strategies for State Policies**
  - **Comp Plans**
  - **Long Range Transportation Plans**
- **Conduct legal reviews**
- **Develop comprehensive outreach strategy**
- **Improve ability of home purchasers to investigate potential SLR issues**
  - **No real estate disclosure**

DRAFT

Sea Level Rise Presentation (continued)

There was discussion among the Council regarding the recommendations that were presented in the Sea Level Rise update and the impact it would have on the citizens of Sussex County.

Procla-mation

The Council presented a Proclamation entitled "COMMUNITY ACTION MONTH" to Bernice Edwards who was in attendance representing the First State Community Action Agency.

Mrs. Edwards thanked the Council for their continued support over the years.

Adminis-rator's report

Mr. Lawson presented the following information in his Administrator's Report:

1. **<u>9-1-1 Awareness Day – May 9, 2013</u>**

   On Thursday, May 9, 2013 Sussex County will host its annual 9-1-1 Awareness Day at the Emergency Operations Center located at 21911 Rudder Lane, next to the Georgetown Airport. The event will run from 9:00 a.m. to 2:00 p.m. and is open to the public. Displays and activities will include K9 demos, police cars and other police divisions, Millsboro Fire Company Safety House, Bridgeville Fire Company Safety House, fire trucks, ambulances, paramedics, County and State Command Centers, Smokey the Bear, Fire Marshal's Office safety display, Delaware State Fire School, DEMA, DNREC, and 9-1-1 education and tours of the operations area. Information regarding the program is attached. The County would also like to thank Domino's Pizza, McDonalds, and Edy's Ice Cream for providing lunch, Blue Hen Trash Service, Clean Delaware Portable Toilets, Food Lion of Millsboro, Wal-Mart of Georgetown and BJ's for their sponsorship.

2. **<u>County Libraries Closing – Thursday May 9, 2013</u>**

   A final reminder, the County Libraries will close on Thursday, May 9, 2013 to allow staff to attend the annual Delaware Library – Maryland Library Association Conference in Ocean City, Maryland.

   The conference provides library staff the opportunity to receive a multistate perspective and an expanded view of collaboration and partnering in addition to subject-specific learning.

   County libraries will reopen at the regular time on Friday, May 10, 2013.

3. **<u>Recognition of Delaware Wastewater Operator of the Year</u>**

   I would like to congratulate Ann Hobbs, Wastewater Operator IV at

DRAFT

Administrator's Report (continued)

the County's South Coastal Treatment Plant for receiving the Delaware Wastewater Operator of the Year Award.

The award is given annually to an operator in the State who exemplifies the highest skill and excellence in their profession.

Ann is the fifth Sussex County employee to receive the award. Congratulations to Ann, it is an honor to have her recognized as a leader in her field.

[Attachments to the Administrator's Report are not attachments to the minutes.]

Bank Resolutions

Mrs. Jennings presented Proposed Resolutions authorizing the change of signatures required on all Sussex County Bank Accounts due to the retirement of Susan M. Webb, Finance Director.

M 230 13 Adopt Resolution No. R 005 13 Sussex County Federal Credit Union Account

A Motion was made by Mr. Phillips, seconded by Mr. Wilson, to Adopt Resolution No. R 005 13 entitled "AUTHORIZING THE PAYMENT FROM FUNDS OF THE SUSSEX COUNTY COUNCIL ON DEPOSIT WITH THE SUSSEX COUNTY FEDERAL CREDIT UNION BEARING THE SIGNATURES OF ANY TWO OF MICHAEL H. VINCENT, PRESIDENT; SAMUEL R. WILSON, VICE PRESIDENT; OR GINA A. JENNINGS, FINANCE DIRECTOR; AND A SIGNATURE MAY BE A FACSIMILE PROVIDED ONE LIVE SIGNATURE IS ON CHECK OR WITHDRAWAL".

Motion Adopted: 5 Yeas.

Vote by Roll Call: Mrs. Deaver, Yea; Mr. Cole, Yea; Mr. Phillips, Yea; Mr. Wilson, Yea; Mr. Vincent, Yea

M 231 13 Adopt Resolution No. R 006 13 M&T, Operating Account

A Motion was made by Mrs. Deaver, seconded by Mr. Phillips, to Adopt Resolution No. R 006 13 entitled "AUTHORIZING THE PAYMENT FROM FUNDS OF THE SUSSEX COUNTY COUNCIL ON DEPOSIT WITH M & T BANK BEARING THE FACSIMILE SIGNATURES OF ANY TWO OF MICHAEL H. VINCENT, PRESIDENT; SAMUEL R. WILSON, VICE PRESIDENT; OR GINA A. JENNINGS, FINANCE DIRECTOR PROVIDED CHECK OR WITHDRAWAL IS LESS THAN OR EQUAL TO $5,000 AND BEARING THE SIGNATURES OF ANY TWO OF MICHAEL H. VINCENT, PRESIDENT; SAMUEL R. WILSON, VICE PRESIDENT; OR GINA A. JENNINGS, FINANCE DIRECTOR; AND A SIGNATURE MAY BE A FACSIMILE PROVIDED ONE LIVE SIGNATURE IS ON CHECK OR WITHDRAWAL GREATER THAN $5,000".

Motion Adopted: 5 Yeas.

DRAFT

M 231 13 (continued)

Vote by Roll Call: **Mrs. Deaver, Yea; Mr. Cole, Yea; Mr. Phillips, Yea; Mr. Wilson, Yea; Mr. Vincent, Yea**

M 232 13 Adopt Resolution No. R 007 13 M&T, Payroll Account

A Motion was made by Mr. Phillips, seconded by Mrs. Deaver, to Adopt Resolution No. R 007 13 entitled "AUTHORIZING THE PAYMENT FROM FUNDS OF THE SUSSEX COUNTY COUNCIL ON DEPOSIT WITH M & T BANK BEARING THE FACSIMILE SIGNATURES OF ANY TWO OF MICHAEL H. VINCENT, PRESIDENT; SAMUEL R. WILSON, VICE PRESIDENT; OR GINA A. JENNINGS, FINANCE DIRECTOR".

Motion Adopted: **5 Yeas.**

Vote by Roll Call: **Mrs. Deaver, Yea; Mr. Cole, Yea; Mr. Phillips, Yea; Mr. Wilson, Yea; Mr. Vincent, Yea**

M 233 13 Adopt Resolution No. R 008 13 M&T, Miscell-aneous Accounts

A Motion was made by Mr. Phillips, seconded by Mr. Wilson, to Adopt Resolution No. R 008 13 entitled "AUTHORIZING THE PAYMENT FROM FUNDS OF THE SUSSEX COUNTY COUNCIL ON DEPOSIT WITH M & T BANK BEARING THE SIGNATURES OF ANY TWO OF MICHAEL H. VINCENT, PRESIDENT; SAMUEL R. WILSON, VICE PRESIDENT; OR GINA A. JENNINGS, FINANCE DIRECTOR; AND A SIGNATURE MAY BE A FACSIMILE PROVIDED ONE LIVE SIGNATURE IS ON CHECK OR WITHDRAWAL".

Motion Adopted: **5 Yeas.**

Vote by Roll Call: **Mrs. Deaver, Yea; Mr. Cole, Yea; Mr. Phillips, Yea; Mr. Wilson, Yea; Mr. Vincent, Yea**

M 234 13 Adopt Resolution No. R 009 13 WSFS Account

A Motion was made by Mr. Phillips, seconded by Mrs. Deaver, to Adopt Resolution No. R 009 13 entitled "AUTHORIZING THE PAYMENT FROM FUNDS OF THE SUSSEX COUNTY COUNCIL ON DEPOSIT WITH THE WILMINGTON SAVINGS FUND SOCIETY, FSB BEARING THE SIGNATURES OF ANY TWO OF MICHAEL H. VINCENT, PRESIDENT; SAMUEL R. WILSON, VICE PRESIDENT; OR GINA A. JENNINGS, FINANCE DIRECTOR; AND A SIGNATURE MAY BE A FACSIMILE PROVIDED ONE LIVE SIGNATURE IS ON CHECK OR WITHDRAWAL".

Motion Adopted: **5 Yeas.**

Vote by Roll Call: **Mrs. Deaver, Yea; Mr. Cole, Yea; Mr. Phillips, Yea; Mr. Wilson, Yea; Mr. Vincent, Yea**

DRAFT

Wastewater Agreement

Hal Godwin, Deputy County Administrator, presented a Wastewater Agreement for the Council's consideration.

M 235 13 Approve/ Wastewater Agreement

A Motion was made by Mrs. Deaver, seconded by Mr. Phillips, based upon the recommendation of the Sussex County Engineering Department, for Sussex County Project No. 81-04, Agreement No. 446-3, that the Sussex County Council execute a Construction Administration and Construction Inspection Agreement between Sussex County Council and "Sweetbriar, LLC", for wastewater facilities to be constructed in "Hopkins – Pettyjohn Subdivision (AKA Red Mill Pond North) – Phase 2", located in the West Rehoboth Expansion of the Dewey Beach Sanitary Sewer District.

Motion Adopted: 5 Yeas.

Vote by Roll Call: Mrs. Deaver, Yea; Mr. Cole, Yea; Mr. Phillips, Yea; Mr. Wilson, Yea; Mr. Vincent, Yea

Legislative Update

Hal Godwin, Deputy County Administrator, presented the following legislative update:

<u>House Bill No. 27</u> – "AN ACT TO AMEND TITLE 30 OF THE DELAWARE CODE RELATING TO STATE TAXES".

Mr. Godwin stated that Representative Short has requested this Bill be moved to the Agenda of the House of Representatives in the next few weeks.

<u>House Bill No. 44</u> – "AN ACT TO AMEND TITLE 25 OF THE DELAWARE CODE RELATING TO PROPERTY."

Mr. Godwin shared that this Bill was initiated based on a Selbyville resident who was informed by his Landlord that he was not allowed to attach a bracket to the front of his home. The Landlord was not denying him the right to display the flag but to install the bracket that held the flag.

This Bill has some support and it is in the Senate but is not on the Senate's Community County Affairs Committee hearing list at this time.

<u>Un-numbered House Bill</u> – This Act is the first leg of a constitutional amendment that will remove the offices of *<u>Clerk of the Peace</u>* from the State Constitution and remove the requirement to elect the Clerks of the Peace.

Mr. Godwin stated that the Bill has not been introduced and would effectively dissolve the *<u>Clerks of the Peace</u>* in the three Counties.

Mr. Godwin has been in communication with Representative Hudson, the primary sponsor, and asked her if this Bill had any connection to the Gay Marriage Bill. Representative Hudson assured Mr. Godwin that it does not.

DRAFT

Legislative Update (continued)

<u>House Bill No. 63</u> – "AN ACT PROPOSING AN AMENDMENT TO ARTICLE 1 OF THE CONSTITUTION RELATING TO AGRICULTURE."

Representative Atkins has stated that he would probably be striking this Bill from the record in the near future and may introduce other legislation once he can more clearly define what issues need to be addressed.

<u>Un-numbered Senate Bill</u> – This Bill allows Delaware residents 65 years of age and older to quality for the "Senior School Property Tax Credit Program" upon entering into a payment plan for taxes due.

Mr. Godwin stated that this Bill has not been initiated.

<u>Un-numbered Senate Bill</u> – This Bill provides for a property tax exemption for the dwelling of military veterans who are disabled and for their spouses, if the veteran is deceased.

Mr. Godwin stated that this Bill has not been initiated.

<u>House Bill No. 74</u> – "AN ACT TO AMEND TITLE 31 OF THE DELAWARE CODE RELATING TO HEALTH INSURANCE".

Mr. Godwin shared that he has spoken with a number of individuals that work Legislative Hall in a lobby fashion and none of them seem to offer this Bill much chance to move through the system in a positive fashion. This initiative has been introduced before with no success.

<u>House Bill No. 95</u> - "AN ACT TO AMEND TITLE 7 OF THE DELAWARE CODE RELATING TO CONSERVATION AND ENVIRONMENTAL LIENS".

Mr. Godwin shared that this Bill was introduced on April 25, 2013 and would allow the Secretary of DNREC to apply a lien against private property to pay for remediation that the State may have to finance on a property that is polluted. This initiative has come from the 2003 Metachem Task Force that was chaired by the Honorable William T. Quillen who was a former judge in Delaware.

The Metachem site has become a Federal Super Fund Site that is located near the Delaware City Refinery and was used for many years by two different chemical companies. Through bankruptcy the owners of this site were able to avoid responsibility, thus the State and Federal government had to move in to remediate the problems of pollution. This Bill was initiated from these concerns.

Mr. Godwin stated that this Bill would change the following:

- **Allows an Environmental Lien to be put in place with just a 21**

DRAFT

Legislative Update (continued)

day notice to the property owner by the Secretary of DNREC instead of having to go through the courts. Usually a lien against a property happens through a judgment and the judgments can only be issued through a court order.

- **Would take priority in front of any other liens against the property (banks, etc.).**
- **Would make it impossible to have these liens discharged through a bankruptcy action (they don't want a large corporate polluter to be able to pollute a piece of property, file bankruptcy and walk away from the responsibilities).**
- **It also allows an extension of the lien to other properties owned by the same individuals/entity given they have received approval from the Court of Chancery which would be petitioned by DNREC.**

This Bill provides for a number of things that Delaware has not been empowered to do; other states located around Delaware and the Federal government have this authority. The Bill was introduced on April 24, 2013, released from Committee on May 1, 2013 and it is on the House agenda for this date.

Mr. Phillips stated that he has very strong concerns about this Bill and would like to request that the Council as a body request that the General Assembly and the House to defer taking action on House Bill No. 95 until the County legal department has had an opportunity to review and see what effect it may have on not just the County but citizens and stake holders.

M 236 13 Request Deferral of Action on HB No. 95

A Motion was made by Mr. Phillips, seconded by Mr. Vincent, requesting the General Assembly and the House to defer taking action on House Bill No. 95 until the County's legal department has had an opportunity to review it and see what effect it may have on not just the County but citizens and stake holders as well.

Motion Adopted: **5 Yeas.**

Vote by Roll Call: **Mrs. Deaver, Yea; Mr. Cole, Yea;**
Mr. Phillips, Yea; Mr. Wilson, Yea;
Mr. Vincent, Yea

Mr. Godwin shared that HB No. 95 is on the Agenda on this date and he would send a request via email asking for the Bill to be tabled at this time. If the Bill cannot be tabled, Mr. Godwin will try to intercept it in the Senate.

Introduction of Proposed Ordinance/

Mr. Cole introduced the Proposed Ordinance entitled "AN ORDINANCE TO AMEND CHAPTER 52, § 52-1 OF THE CODE OF SUSSEX COUNTY TO ADOPT THE BUILDING CONSTRUCTION STANDARDS IN THE

DRAFT

Ord. Intro. Building Code (continued)

INTERNATIONAL BUILDING CODE 2012 EDITION AND THE INTERNATIONAL RESIDENTIAL CODE 2012 EDITION, WITH EXCEPTIONS".

[The Proposed Ordinance will be advertised for Public Hearing]

EMS #106/ Change Order No. 1

John Ashman, Director of Utility Planning, presented Change Order No. 1 for the Long Neck EMS Station 106. Mr. Ashman reported that the Change Order is a request to extend the project completion time by 24 calendar days to assist in weather related days lost in January and February as well as $840.00 to upgrade the firewall between the garage and the residence from a 1 hour to a 2 hour fire wall.

M 237 13 Approve Change Order/ EMS #106

A Motion was made by Mrs. Deaver, seconded by Mr. Phillips, based upon the recommendation of the Sussex County Engineering Department, that Change Order No. 1 be approved for Sussex County Project No. 12-19, EMS #106 Long Neck Station, to extend the project completion time by 24 calendar days due to weather related delays, extra work and materials to upgrade the firewall from 1 hour to 2 hour at a cost of $840.00, thereby increasing the contract amount from $478,950.00 to $479,790.00.

Motion Adopted: **5 Yeas.**

Vote by Roll Call: **Mrs. Deaver, Yea; Mr. Cole, Yea; Mr. Phillips, Yea; Mr. Wilson, Yea; Mr. Vincent, Yea**

Grant Requests

Mrs. Jennings presented grant requests for the Council's consideration.

M 238 13 Council-manic Grant

A Motion was made by Mr. Phillips, seconded by Mr. Wilson, to give $1,000.00 from Mr. Phillips' Councilmanic Grant Account to the Gumboro Community Center for operating expenses.

Motion Adopted: **5 Yeas.**

Vote by Roll Call: **Mrs. Deaver, Yea; Mr. Cole, Yea; Mr. Phillips, Yea; Mr. Wilson, Yea; Mr. Vincent, Yea**

M 239 13 Council-manic Grant

A Motion was made by Mr. Wilson, seconded by Mr. Phillips, to give $7,500.00 from Mr. Wilson's Councilmanic Grant Account to the Historic Georgetown Association for Old Firehouse and Train Station restoration expenses.

Motion Adopted: **5 Yeas.**

Vote by Roll Call: **Mrs. Deaver, Yea; Mr. Cole, Yea; Mr. Phillips, Yea; Mr. Wilson, Yea; Mr. Vincent, Yea**

DRAFT

M 240 13 Council-manic Grant

A Motion was made by Mr. Cole, seconded by Mr. Phillips, to give $800.00 ($200.00 each from Mr. Cole's, Mr. Wilson's, Mr. Phillips' and Mr. Vincent's Councilmanic Grant Account) to Delaware Technical & Community College for Kids on Campus scholarship funding.

Motion Adopted: **5 Yeas.**

Vote by Roll Call: **Mrs. Deaver, Yea; Mr. Cole, Yea; Mr. Phillips, Yea; Mr. Wilson, Yea; Mr. Vincent, Yea**

(Mr. Phillips requested that Council discuss options to enhance the Paramedic Program currently held at Delaware Technical and Community College.)

M 241 13 Council manic Grant

A Motion was made by Mr. Wilson, seconded by Mr. Cole, to give $1,000.00 from Mr. Vincent's Councilmanic Grant Account to Nanticoke Young Life for Team Xtreme program expenses.

Motion Adopted: **5 Yeas.**

Vote by Roll Call: **Mrs. Deaver, Yea; Mr. Cole, Yea; Mr. Phillips, Yea; Mr. Wilson, Yea; Mr. Vincent, Yea**

Additional Business

Under Additional Business, Dan Kramer commented on the Sea Level Rise presentation and stated that water tables vary year to year.

Mr. Lawson recommended canceling the May 14, 2013 Council meeting due to the lack of activity to be placed on the Agenda to be brought before Council.

M 242 13 Cancel Meeting

A Motion was made by Mr. Cole, seconded by Mr. Wilson, to cancel the May 14, 2013 Council meeting for lack of Agenda items to bring before Council.

Motion Adopted: **3 Yeas, 2 Nays.**

Vote by Roll Call: **Mrs. Deaver, Nay; Mr. Cole, Yea; Mr. Phillips, Nay; Mr. Wilson, Yea; Mr. Vincent, Yea**

Additional Business (continued)

(Mr. Lawson shared that the County is currently in discussions with the leadership at Delaware Technical and Community College to try to expand the Paramedic Program which will ultimately come down to funding. There was a short discussion among Council members.)

M 243 13 Adjourn

A Motion was made by Mr. Cole, seconded by Mr. Phillips, to adjourn at 11:50 a.m.

DRAFT

M 243 13 (continued)

Motion Adopted: **5 Yeas.**

Vote by Roll Call: **Mrs. Deaver, Yea; Mr. Cole, Yea; Mr. Phillips, Yea; Mr. Wilson, Yea; Mr. Vincent, Yea**

Respectively submitted,

Kelly A. Collins
Administrative Secretary

DRAFT

SUSSEX COUNTY COUNCIL - GEORGETOWN, DELAWARE, MAY 21, 2013

A regularly scheduled meeting of the Sussex County Council was held on Tuesday, May 21, 2013, at 10:00 a.m., in the Council Chambers, Sussex County Administrative Office Building, Georgetown, Delaware, with the following present:

Michael H. Vincent	**President**
Samuel R. Wilson, Jr.	**Vice President**
George B. Cole	**Councilman**
Joan R. Deaver	**Councilwoman**
Vance Phillips	**Councilman**
Todd F. Lawson	**County Administrator**
Susan M. Webb	**Finance Director**
Gina Jennings	**Finance Director Appointee**
J. Everett Moore, Jr.	**County Attorney**

The Invocation and Pledge of Allegiance were led by Mr. Vincent.

Call to Order

Mr. Vincent called the meeting to order.

M 244 13 Amend and Approve Agenda

A Motion was made by Mr. Phillips, seconded by Mr. Wilson, to amend the Agenda by changing the order of the Agenda by moving Gina Jennings, Finance Director, - Financial Report for the Nine Months ending March 31, 2013" immediately after "Presentation of Construction Contribution Check" and by deleting "Job Applicants′ Qualifications" and "Personnel" under "Executive Session"; and to approve the Agenda, as amended.

Motion Adopted: 5 Yeas.

Vote by Roll Call: Mrs. Deaver, Yea; Mr. Cole, Yea; Mr. Phillips, Yea; Mr. Wilson, Yea; Mr. Vincent, Yea

Attorney General's Opinion on FOIA Complaint and Notice of Change in Agenda Preparation and Posting

Mr. Lawson reported on a recent opinion issued by the Attorney General's Office on Sussex County Council's agenda practices. He stated that, although the Attorney General's Office did not find Sussex County in violation of FOIA, the Office did urge that the County amend its practices when it comes to the Agenda and the posting of the Agenda. Mr. Lawson stated that in the future, at the time when the Agenda is posted on a Tuesday prior to the next meeting date, if Executive Session items are known, the issues will be listed. Once the Agenda has been posted and it is determined that additional Executive Session items need to be included, the Agenda will be amended (between the Tuesday of the posting and the Monday prior to the meeting) on the website and on the bulletin board in the County Administrative Building to make the public aware of the changes.

DRAFT

Minutes **The minutes of April 30, 2013 were approved by consent.**

Corre-spondence **Mr. Moore read the following correspondence:**

THE JEFFERSON SCHOOL, GEORGETOWN, DELAWARE.
RE: Letter in appreciation of the Council's sponsorship of The Jefferson School's 5K race to benefit the scholarship program.

INDIAN RIVER SENIOR CENTER, MILLSBORO, DELAWARE.
RE: Letter in appreciation of a grant for an event held on May 8th in recognition of veterans.

WOODLAND FERRY ASSOCIATION, WOODLAND, DELAWARE.
RE: Letter in appreciation of a grant for their upcoming festival.

Barking Dog Complaints/ Previous Draft Ordinance **Mrs. Deaver announced that she receives emails and phone calls about barking dog complaints.**

Mr. Phillips stated that, during the previous Council's rule, he had brought forth the barking dog issue and a draft ordinance was briefly considered. There was no objection to ask staff to locate the draft ordinance and to bring it back to Council for reconsideration.

Check Presentation **Norma Prettyman, Treasurer of the Friends of the Greenwood Library Capital Campaign, presented a check in the amount of $75,000 to the Council representing the Friend's first portion of their construction contribution agreement with the County for the new Greenwood Library facility. Mrs. Prettyman noted that the Longwood Foundation has helped make this payment possible and that they are giving the Library a dollar for dollar match for everything the Friends earn from the end of March 2013 until September 2014. Mrs. Prettyman thanked the Council for its support of the Greenwood Library project.**

Financial Report Ending 3/31/13 **Gina Jennings presented the Financial Report for the Nine Months ending March 31, 2013. She reported that revenues are up 5.71 percent, largely due to building related revenues; that Realty Transfer Tax is showing a 28 percent increase; and that expenditures are under budget by .17 percent.**

Adminis-trator's Report **Mr. Lawson read the following information in his Administrator's Report:**

1. <u>Sussex County Airport Advisory Committee</u>

The Sussex County Airport Advisory Committee will meet on Wednesday, May 22, 2013, at the Sussex County Emergency Operations Center at 6:00 p.m. Included with this report is a copy of the agenda for the meeting.

DRAFT

Administrator's Report (continued)

2. Sussex County Emergency Operations Center Call Statistics – April 2013

Attached please find the call statistics for the Fire and Ambulance Callboard for April 2013. There were 14,641 total calls handled in the month of April. Of those 9-1-1 calls in April, 74 percent were made from wireless phones.

3. Memorial Day Holiday

County offices will be closed on Monday, May 27th, to observe the Memorial Day Holiday. Offices will reopen on Tuesday, May 28th, at 8:30 a.m. The County Council will not meet on May 28th. The next Council meeting will be held on Tuesday, June 4, 2013.

4. Susie M. Webb Retirement

This Friday, May 24th is Susie Webb's last day with the County as she enters the next stage of her life – retirement. A Proclamation will be read in her honor.

[Attachments to the Administrator's Report are not attachments to the minutes.]

Susan W. Webb Retirement Tribute

The Council presented a Tribute to Susan M. Webb, Finance Director, on the occasion of her retirement from the County after 20 years of service (May 1, 1993 – May 24, 2013). The Council and Mr. Lawson extended their thanks and congratulations to Susan M. Webb.

Fiscal Year 2014 Budget

Mr. Lawson, along with Susan Webb, Finance Director, Gina Jennings, Finance Director Appointee, and Kathy Roth, Budget Director and Cost Manager, presented the proposed $117.7 million budget for Fiscal Year 2014 and the accompanying budget letter. Mr. Lawson stated that the budget represents a collaborative effort between the Budget Committee, Department Heads and staff.

Mr. Lawson reported that the FY 2014 Budget again presents a challenge of that revenues are expected to slowly recover and have increased at a modest level of 3 percent for the General Fund. However, revenues from the housing sector have increased 10 percent, which shows some positive movement for the local economy. The County's largest revenue source, Realty Transfer Tax, is budgeted at $16 million, which is half of what it was in 2006. Mr. Lawson stated that, thanks in part to the Council's leadership and fiscal responsibility, along with conservative budgeting, the County will continue without raising taxes or increasing fees.

The County's budgeting principles remain as follows:

DRAFT

Fiscal Year 2014 Budget (continued)

- **Prepare a balanced budget with minimal increases**
- **Maintain an operating reserve of approximately 25 percent**
- **Continue at the actuarial determined level of funding for pensions and pension benefits**
- **Operate without tax-supported debt**
- **Maintain AA+ strong bond rating**
- **Maintain funding for local libraries**
- **Use technology to streamline and automate business practices**
- **Enhance the County's virtual interface to improve customer service**
- **Provide a greater level of service to County residents**
- **Upgrade and maintain existing wastewater services**
- **Pay-as-you-go philosophy for the capital projects fund**
- **Continue to eliminate existing septic systems**
- **Continue the sewer assistance programs to help low-income residents**

Mr. Lawson reported that the Budget Committee has made assumptions as the budget was prepared. The Committee assumes that the County will continue to receive 1.5 percent of Realty Transfer Tax on eligible properties in unincorporated areas. The Committee also assumes the County will continue to receive the 30 percent grant from the State of Delaware to fund the paramedic program.

Mr. Lawson presented 2014 Budget highlights:

- **No change in County property tax rate (24th year)**
  - **Average County tax for a single-family home - $107.74 or $0.30 per day**
  - **Average County tax for a manufactured home - $40.66 or $0.11 per day**
- **Reduced staffing levels – 5.5 less positions**
- **General Fund is up $3.7 million**
  - **$1.8 million from FY 2013's anticipated surplus**
  - **One-time budget item for employee comp/holiday payout**
- **Decrease in sewer assessment charges due to bond refinancing and debt payoffs**
- **Continue to fund critical public safety grants**
  - **Fire and ambulance services - $3.3 million**
  - **Local Law Enforcement - $575,000**
  - **State Police - $1.9 million for 44 additional State troopers**
- **Total library funding - $4.5 million**
- **Aggressive governmental capital plan without general fund debt - $9.9 million (55% for airport projects and 23% for library projects)**

DRAFT

Fiscal Year 2014 Budget (continued)

Mr. Lawson presented a breakdown of the $117.7 million budget:

Expenditures	Fiscal 2014	Percentage Change Compared to Fiscal 2013
General Fund	$50,136,848	8.1%
Capital Projects Governmental Fund	$ 9,873,020	(25.5%)
Enterprise Funds (Sewer and Water)	$33,616,598	(3.8%)
Capital Projects Enterprise Fund	$17,911,000	(15.6%)
Fiduciary Funds	$ 6,182,744	16.0%

The total budget in the amount of $117,720.210 reflects a (2.8%) change compared to Fiscal 2013.

Mr. Lawson highlighted personnel goals and objectives:

- **No COLA**
- **2 percent one-time bonus**
- **Merit increases**
- **Pension contribution – $5 million**
- **No change in health insurance contributions and coverage**
- **Continue health insurance opt-out incentives**
- **Begin dental and vision insurance in early 2014**
- **Continue tuition reimbursements**
- **11 paid holidays with 2 floating holidays**
- **Pension plan changes for new hires (in 2014) – 3 percent contribution**
- **No more comp time accrual. Overtime will be paid and not banked.**
- **Comp time/holiday bank payout**
- **Spousal coordination and birthday rule**

Mr. Lawson advised that, a few weeks ago, the Council was provided with information on the effects of the Affordable Care Act (aka Obamacare) on the County's health insurance policy. When the Act takes effect, it will cost the County $323,000 the first year after which that number will increase. Therefore, the Council has some options to consider: (1) raise County taxes, (2) increase or pass along that charge to employees ($646.00 annually per employee), (3) decrease the benefits that employees receive, or (4) take "lives" off of the health plan with spousal coordination and the birthday rule. Mr. Lawson stated that the proposed budget recommends Option 4.

DRAFT

Fiscal Year 2014 Budget (continued)

Mr. Lawson reported that the proposed budget includes 3 new positions in FY 2014; however, total employment will still be 5.5 employees less than Fiscal 2013. The County is down 55 employees over the past five years.

Gina Jennings reviewed the General Fund highlights and she noted that the total operating budget increased 8.1 percent ($3.7 million). She stated that, in Fiscal 2014, the comp liability of the County will be paid down and the County will start putting money aside for a capital projects fund; this hasn't been done since 2008. Mrs. Jennings reported that there are no proposed tax or fee increases; that the taxable assessments increased 1.4 percent; that the intergovernmental grants increased 9.5 percent; and overall revenues have increased 2.5 percent (conservatively budgeted).

Mrs. Jennings reviewed the County's primary funding sources including Realty Transfer Tax (32%) and property taxes (29%). Mrs. Jennings reviewed the history of Realty Transfer Tax back to 2002; from 2010, it has been increasing. In 2014, the Budget Committee is projecting to bring in $18 million in Realty Transfer Tax; however, only $16 million is budgeted (cautiously optimistic) instead of the $18 million expected. In 2013, $13 million was budgeted.

Mrs. Jennings reviewed General Fund expenditures: Paramedic Program (26%); Grant-in-Aid (15%); Finance (9%); and Libraries (8%).

Mrs. Jennings reviewed how one County tax dollar is spent: Public safety ($.55); Libraries ($0.14); Housing Rehabilitation & Other Community Support ($0.04); Code Enforcement, Planning & Zoning, Permitting & Addressing ($0.09); Special Services ($.08) (includes Economic Development, Airport, Engineering Administration and Public Works); and General Government ($0.10) (includes County Council, Administration, Legal, Finance & Constitutional Offices).

Susan Webb reported that grants are the second largest category of the General Fund expenses ($7.3 million); the amount was the same in the last year's budget. Mrs. Webb highlighted the grant-in-aid program: 79% for public safety; 8% for libraries; 2% for wastewater; 2% for Agriculture and Land; 8% for Community Grants, and 1% for Town Grants.

Mrs. Webb reported that public safety grants total $21.9 million: $13.1 million for Paramedics; $3 million for Emergency Operations; and $5.8 million for Public Safety Grants (Fire and Ambulance Service, Local Law Enforcement, and State Police).

Mrs. Webb presented the Community Development funding for Fiscal 2014: CDBG - $1,052,000; Neighborhood Stabilization Program (NSP) - $357,500; HUD HOME Program - $300,000; Delaware State Housing Loan - $121,800; County Council Emergency Grant Assistance - $100,000; and Housing Preservation Grant (HPG) - $25,000. She noted that the Community Development Department serves approximately 130 – 150

DRAFT

Fiscal Year 2014 Budget (continued)

Sussex County households in a year.

Mrs. Webb reviewed Capital Projects:

- **$5.4 Million for Airpark Projects – Runway 4-22 Extension, Stormwater Improvements, Lighting and Pavement Improvements**
- **$2.2 Million for Libraries – Greenwood Library Expansion, Milton Library Improvements, South Coastal Library Improvements**
- **$787,000 for County Buildings – Administration Building Improvements, Records Management Building, and IT Data Center**
- **$625,000 for Engineering – Woodland Park and Land Acquisition**
- **$799,000 for Other Projects – Enterprise Resource Planning (ERP) System, Parking Lot Improvements, and EMS Station**

Mrs. Webb noted that the capital projects fund is its own separate budget as these funds are used for long term projects.

Kathy Roth reviewed the highlights for Enterprise (Sewer and Water) Funds:

- **Service Charges – continue to work toward a uniform sewer rate**
- **Decrease in assessment rates due to bond refinancing and debt payoff**
- **1.5% increase in EDUs**
- **4% decrease in 2014 operating budget**
- **16% decrease in capital projects**
- **System connection charges – 2.273% increase for inflation**
- **Continue 100 foot cap (for front foot assessment)**
- **Rate Study**

Mrs. Roth provided the following sewer expense summary:

- **Administrative and General Expenses increased 10.0%, $502,000 (6 sewer studies – 50% reimbursed by the State)**
- **Operations expenses increased 6.9%, $668,000**
  - **Electrical Safety Consultant**
  - **Chemicals**
  - **3rd party wastewater treatment costs**
  - **Engineering for pumping system improvements**
- **Capital Expense decreased 18.2%, $588,000**
  - **Pumping equipment - $1,400,000**
  - **Transportation equipment - $209,000**
  - **Final phase of ERP - $236,000**
  - **Generators - $119,000**
- **Debt service decreased 12.8%, $2,049,000**

DRAFT

Fiscal Year 2014 Budget (continued)

Mrs. Roth reviewed the assessment charges and annual charges for all sewer districts and noted that the charges for most of the districts have decreased (some remain the same and some were eliminated). Regarding the Dewey water fund, revenues increased 11.9 percent, or $127,000; there was an increase in the cost to purchase water from the supplier (City of Rehoboth); the assessment charges in this district has been eliminated; and the average rate per user will be the same as last year.

Mrs. Roth reported that Enterprise Capital Projects will total $17.9 million (estimated). The majority of these projects will be funded by State or Federal funds (grants or loans).

Mrs. Roth noted that the Budget Committee is recommending $158 Million in 5-Year Capital Improvements Funding - $34 Million in Non-Water & Sewer Capital Projects and $124 Million in Water & Sewer Capital Projects.

Mrs. Roth reported that the budget and the accompanying budget presentation will be available on the County's website. Public Hearings on the budget will be held on June 18, 2013. The public can comment in person on that date, or submit comments through the County's website at budget@sussexcountyde.gov.

Council members discussed the proposed budget, including the following topics: health care - spousal coordination and birthday rule; foreclosures; surplus; one-time bonus v. COLA; a more equitable disbursement of the one-time bonus; and excluding Councilmembers from the one-time bonus.

Introduction of Proposed Budget Ordinances

Mr. Phillips introduced the Proposed Ordinances entitled "AN ORDINANCE ESTABLISHING THE ANNUAL OPERATING BUDGET FOR FISCAL YEAR 2014" and "AN ORDINANCE ESTABLISHING ANNUAL SERVICE CHARGES, ANNUAL ASSESSMENT RATES FOR COLLECTION AND TRANSMISSION AND/OR TREATMENT, AND CONNECTION CHARGES FOR ALL SUSSEX COUNTY WATER AND SEWER DISTRICTS". The Proposed Ordinances will be advertised for Public Hearing.

Legislative Update

Hal Godwin, Deputy County Administrator, presented the following legislative update:

House Bill No. 95 – "AN ACT TO AMEND TITLE 7 OF THE DELAWARE CODE RELATING TO CONSERVATION AND ENVIRONMENTAL LIENS".

Mr. Godwin stated that he was unable to get this Bill tabled; however, he did speak with members of the House and the Bill was removed from the Agenda and placed on the Ready List – they have not acted on the Bill. The purpose of this was to give Everett Moore time to examine the Bill. The Bill has also had an amendment offered since its introduction.

DRAFT

Legislative Update (continued)

Mr. Moore stated that the Council expressed concern about this Bill when it came before the Council on May 7th; the concern was in regard to the power of DNREC. Mr. Moore stated that the amendment to the Bill does increase the time before a lien is placed – from 21 days to 30 days and he explained the proposed amendment. Mr. Moore stated that there was also some concern about the priority of the lien and he noted that the amendment clarifies that a lien would have priority only on liens that come after.

Mr. Godwin stated that he still needs the Council's direction on this Bill.

<u>House Bill No. 135</u> – "AN ACT TO AMEND TITLES 3 AND 29 OF THE DELAWARE CODE RELATING TO THE LICENSING OF VIDEO LOTTERY CASINOS AND HARNESS RACING DAYS".

This Bill was introduced on May 9th; on May 15th, it was tabled in the House Gaming Committee.

<u>House Bill No. 137</u> – "AN ACT TO AMEND TITLES 11 AND 29 OF THE DELAWARE CODE RELATING TO THE STATE EMPLOYEES' PENSION PLAN, THE COUNTY AND MUNICIPAL EMPLOYEES' PENSION PLAN, THE COUNTY AND MUNICIPAL POLICE/FIREFIGHTER PENSION PLAN, THE STATE JUDICIARY PENSION PLAN, THE STATE POLICE PENSION PLAN, AND PENSIONS".

Mr. Godwin stated that this Bill may cause a change in how the County calculates pension.

Mrs. Jennings stated that, currently, if a County pensioner passes away, the surviving spouse gets 50% of the pension. The proposed Bill would change that percentage to up to 75% of the pension, consistent with what the State does.

It was noted that the employee would have to elect to have his or her pension computed under this legislation to help fund this benefit.

M 245 13 Direct the Administrator to Send a Letter to Legislators/ Pension Benefits

A Motion was made by Mr. Cole, seconded by Mr. Phillips, to direct the County Administrator to write a letter to the legislators advising that the County wants to offer its own benefit package.

Motion Adopted: **4 Yeas, 1 Nay.**

Vote by Roll Call: **Mrs. Deaver, Nay; Mr. Cole, Yea; Mr. Phillips, Yea; Mr. Wilson, Yea; Mr. Vincent, Yea**

(Mrs. Deaver stated that she wanted more time to look at the Bill prior to voting.)

DRAFT

Legislative Update (continued)

Mr. Godwin reported on the Animal Welfare Task Force Report and stated that he forwarded a copy of the final report to each Council member. Mr. Godwin stated that he made sure the following statement was included in the report: "due to the cost of contracts, Sussex County supports returning dog control to the State".

Airport Concrete Apron Project

Bob Jones, Project Engineer, presented bid results for the Sussex County Airport Concrete Apron Repairs. The low bidder was Mitten Construction Company of Dover, Delaware, in the amount of $69,750.00. The Engineer's Estimate for the project was $159,680.00.

M 246 13 Award Bid/ Airport Concrete Apron Project

A Motion was made by Mrs. Deaver, seconded by Mr. Wilson, based upon the recommendation of the Sussex County Engineering Department, that Sussex County Project 12-28, Concrete Apron Repairs, Phase 1, be awarded to Mitten Construction Company of Dover, Delaware, at the bid amount of $69,750.00.

Motion Adopted: 5 Yeas.

Vote by Roll Call: Mrs. Deaver, Yea; Mr. Cole, Yea; Mr. Phillips, Yea; Mr. Wilson, Yea; Mr. Vincent, Yea

Grant Requests

Mrs. Jennings presented grant requests for the Council's consideration.

M 247 13 Council-manic Grant

A Motion was made by Mr. Phillips, seconded by Mrs. Deaver, to give $500.00 ($125.00 each from Mr. Phillips', Mr. Vincent's, Mr. Cole's, and Mr. Wilson's Councilmanic Grant Accounts) to the Delaware Police Chiefs' Council for seminar costs.

Motion Adopted: 5 Yeas.

Vote by Roll Call: Mrs. Deaver, Yea; Mr. Cole, Yea; Mr. Phillips, Yea; Mr. Wilson, Yea; Mr. Vincent, Yea

M 248 13 Council-manic Grant

A Motion was made by Mr. Cole, seconded by Mr. Phillips, to give $500.00 from Mr. Cole's Councilmanic Grant Account to the Mid-Atlantic Symphony Orchestra for operating costs.

Motion Adopted: 5 Yeas.

Vote by Roll Call: Mrs. Deaver, Yea; Mr. Cole, Yea; Mr. Phillips, Yea; Mr. Wilson, Yea; Mr. Vincent, Yea

M 249 13 Grant

A Motion was made by Mr. Cole, seconded by Mr. Phillips, to give $1,000.00 from Mr. Cole's Councilmanic Grant Account to the Ocean View Historical Society for the Coastal Towns Museum Project.

DRAFT

M 249 13 (continued)

Motion Adopted: **5 Yeas.**

Vote by Roll Call: **Mrs. Deaver, Yea; Mr. Cole, Yea; Mr. Phillips, Yea; Mr. Wilson, Yea; Mr. Vincent, Yea**

M 250 13 Council-manic Grant

A Motion was made by Mr. Cole, seconded by Mr. Phillips, to give $1,000.00 from Mr. Cole's Councilmanic Grant Account to the Rehoboth Art League to sponsor the annual gala which benefits their education, outreach and tuition assistance programs.

Motion Adopted: **5 Yeas.**

Vote by Roll Call: **Mrs. Deaver, Yea; Mr. Cole, Yea; Mr. Phillips, Yea; Mr. Wilson, Yea; Mr. Vincent, Yea**

Introduction of Proposed Ordinances

Mr. Wilson introduced the Proposed Ordinance entitled "AN ORDINANCE TO GRANT A CONDITIONAL USE OF LAND IN AN AR-1 AGRICULTURAL RESIDENTIAL DISTRICT FOR USED CAR SALES TO BE LOCATED ON A CERTAIN PARCEL OF LAND LYING AND BEING IN GEORGETOWN HUNDRED, SUSSEX COUNTY, CONTAINING 37,500 SQUARE FEET, MORE OR LESS" (Conditional Use No. 1964) filed on behalf of Salman P. Choudhary, t/a Master Tires. The Proposed Ordinance will be advertised for Public Hearing.

Mr. Phillips introduced the Proposed Ordinance entitled "AN ORDINANCE TO MODIFY CONDITION NO. 24 IMPOSED ON ORDINANCE NO. 2110 FOR CHANGE OF ZONE NO. 1694, THE APPLICATION OF CMF BAYSIDE, LLC, FOR "AMERICANA BAYSIDE" A MR-RPC MEDIUM DENSITY RESIDENTIAL DISTRICT – RESIDENTIAL PLANNED COMMUNITY, TO ALLOW REVISED COMMERCIAL ENTRANCE LOCATION (LEFT-TURN) AS MAY BE APPROVED BY DELDOT" (Change of Zone No. 1731) filed on behalf of CMF Bayside, LLC. The Proposed Ordinance will be advertised for Public Hearing.

Additional Business

Under Additional Business, Barbara Vaughn of Lewes introduced a new Lewes City Council member, Dennis Reardon.

Under Additional Business, Frieda and Arthur Neal of Lewes talked about problems they have had with their new home that was built by Schell Brothers. They stated that they have received reports from professional experts and they distributed copies of the reports to the Council. Mr. and Mrs. Neal stated that there are approximately 50 major code and other violations – from an energy audit to termite treatment; that they have spent nearly $13,000 of their own money on experts; and that they are physically sick due to construction problems, i.e. asthma attacks, trouble breathing, and headaches.

DRAFT

Additional Business (continued)

Don Ayotte of Georgetown stated that in light of continued and recent allegations regarding Mr. Phillips, he asked that Mr. Phillips resign from his position on the Sussex County Council and he stated that the entire Sussex County Council should demand his resignation.

Dan Kramer of Bridgeville referenced a vote taken on the barking dog issue at the beginning of the meeting and he stated if the Council does not stop taking action on items not listed on the Agenda, that he would be filing a FOIA complaint.

M 251 13 Recess

At 11:36 a.m., a Motion was made by Mr. Phillips, seconded by Mrs. Deaver, to recess and go into Executive Session.

Motion Adopted: **5 Yeas.**

Vote by Roll Call: **Mrs. Deaver, Yea; Mr. Cole, Yea;**
Mr. Phillips, Yea; Mr. Wilson, Yea;
Mr. Vincent, Yea

Executive Session

At 11:37 a.m., an Executive Session of the Sussex County Council was held in the Caucus Room of the Council Chambers to discuss issues relating to pending/potential litigation and land acquisition. The Executive Session concluded at 11:52 a.m.

M 252 13 Reconvene

At 11:54 a.m., a Motion was made by Mrs. Deaver, seconded by Mr. Wilson, to come out of Executive Session and to reconvene the Regular Session.

Motion Adopted: **4 Yeas, 1 Absent.**

Vote by Roll Call: **Mrs. Deaver, Yea; Mr. Cole, Absent;**
Mr. Phillips, Yea; Mr. Wilson, Yea;
Mr. Vincent, Yea

Action

No action was required on Executive Session items.

M 253 13 Recess

At 11:55 a.m., a Motion was made by Mrs. Deaver, seconded by Mr. Phillips, to recess until 1:30 p.m.

Motion Adopted: **4 Yeas, 1 Absent.**

Vote by Roll Call: **Mrs. Deaver, Yea; Mr. Cole, Absent;**
Mr. Phillips, Yea; Mr. Wilson, Yea;
Mr. Vincent, Yea

M 254 13 Reconvene

At 1:37 p.m., a Motion was made by Mrs. Deaver, seconded by Mr. Wilson, to reconvene.

DRAFT

M 254 13 (continued)

Motion Adopted: **5 Yeas.**

Vote by Roll Call: **Mrs. Deaver, Yea; Mr. Cole, Yea; Mr. Phillips, Yea; Mr. Wilson, Yea; Mr. Vincent, Yea**

Public Hearing (C/U No. 1960)

A Public Hearing was held on the Proposed Ordinance entitled "AN ORDINANCE TO GRANT A CONDITIONAL USE OF LAND IN AN AR-1 AGRICULTURAL RESIDENTIAL DISTRICT TO MODIFY THE BOUNDARIES OF EXISTING CONDITIONAL USE NO. 1699 (ORDINANCE NO. 1936) FOR A GO-KART TRACK TO BE LOCATED ON A CERTAIN PARCEL OF LAND LYING AND BEING IN BROADKILL HUNDRED, SUSSEX COUNTY, CONTAINING 3.24 ACRES, MORE OR LESS" (Conditional Use No. 1960) filed on behalf of Harry H. Isaacs, Jr./Farm Boys, LLC.

The Planning and Zoning Commission held a Public Hearing on this application on April 25, 2013 at which time the Commission recommended approval for the following reasons:

1) **This is simply a correction of the boundaries, and does not modify the use that was previously approved by Sussex County.**
2) **The use remains in the same location as it always was; this just relocates the boundaries to correctly reflect where the use actually is.**
3) **This modification will not adversely affect neighboring properties, roadways or the community.**
4) **The conditions imposed by Conditional Use No. 1699 and Ordinance No. 1936 shall remain in effect.**

(See the minutes of the Planning and Zoning Commission dated April 25, 2013.)

Lawrence Lank, Director of Planning and Zoning, read a summary of the Planning and Zoning Commission's Public Hearing.

The Council found that Harry H. Isaacs, Jr. was present and he stated that they received approval in 2007; that they recently discovered that the track was not contained within the original conditional use boundaries; that nothing has changed on the site; that their only intent is to correctly locate the go-kart track within the corrected boundaries; that they are asking permission to move the boundary approximately 50 feet so that the traffic will all be in the conditional use area; that there should be no adverse impact on neighboring properties; that family members maintain the acreage all around and near the site; and that the insurance company does not want to insure the go-kart traffic that is currently on the farm.

Mr. Lank clarified that the intent of the application is to create a boundary around the track site that is used for parking and traffic and to keep it away from the buildings that farm related.

DRAFT

There were no public comments and the Public Hearing was closed.

M 255 13 Adopt Ordinance No. 2305 (C/U No. 1960)

A Motion was made by Mr. Wilson, seconded by Mrs. Deaver, to Adopt Ordinance No. 2305 entitled "AN ORDINANCE TO GRANT A CONDITIONAL USE OF LAND IN AN AR-1 AGRICULTURAL RESIDENTIAL DISTRICT TO MODIFY THE BOUNDARIES OF EXISTING CONDITIONAL USE NO. 1699 (ORDINANCE NO. 1936) FOR A GO-KART TRACK TO BE LOCATED ON A CERTAIN PARCEL OF LAND LYING AND BEING IN BROADKILL HUNDRED, SUSSEX COUNTY, CONTAINING 3.24 ACRES, MORE OR LESS" (Conditional Use No. 1960) filed on behalf of Harry H. Isaacs, Jr./Farm Boys, LLC, with the following condition:

1) **The conditions imposed by Conditional Use No. 1699 and Ordinance No. 1936 shall remain in effect.**

Motion Adopted: **5 Yeas.**

Vote by Roll Call: **Mrs. Deaver, Yea; Mr. Cole, Yea;**
Mr. Phillips, Yea; Mr. Wilson, Yea;
Mr. Vincent, Yea

Public Hearing/ C/U No. 1961

A Public Hearing was held on the Proposed Ordinance entitled "AN ORDINANCE TO GRANT A CONDITIONAL USE OF LAND IN AN AR-1 AGRICULTURAL RESIDENTIAL DISTRICT FOR A LANDSCAPING BUSINESS TO BE LOCATED ON A CERTAIN PARCEL OF LAND LYING AND BEING IN INDIAN RIVER HUNDRED, SUSSEX COUNTY, CONTAINING 0.997 ACRE, MORE OR LESS" (Conditional Use No. 1961) filed on behalf of Rendell Whibley and Ann Marie Whibley.

The Planning and Zoning Commission held a Public Hearing on this application on April 25, 2013 at which time the Commission recommended that the application be approved with the following conditions:

1) **The use shall be limited to a landscaping business without any retail sales occurring on the site.**
2) **No exterior storage shall be permitted on the site. All storage shall be inside of the pole building proposed by the Applicant or a similar structure.**
3) **There shall not be any disturbance of the wetlands located on the site.**
4) **Any security lighting shall be downward screened so that it does not shine on neighboring properties or roadways.**
5) **One sign, lighted or unlighted, shall be permitted. It shall be no larger than 32 square feet per side.**
6) **The hours of operation, as proposed by the Applicant, shall be from 7:00 a.m. to 6:00 p.m. Monday through Friday, and 7:00 a.m. to**

DRAFT

Public Hearing/ C/U No. 1961 (continued)

Noon on Saturdays.

7) **All equipment repairs shall occur indoors.**
8) **The Final Site Plan shall be subject to the review and approval of the Sussex County Planning and Zoning Commission.**

(See the minutes of the Planning and Zoning Commission dated April 25, 2013.)

Lawrence Lank, Director of Planning and Zoning, read a summary of the Commission's Hearing.

Exhibit Booklets, which were provided by the Applicant, were distributed.

The Council found that Kendell Whibley was present with Steve McCabe, Professional Engineer with Pennoni Associates, Inc. Mr. McCabe stated that they are in agreement with the conditions proposed by the Planning and Zoning Commission; that the application is consistent with the Land Use Plan and is in accordance with the uses in the area; that the information included in the report of the Planning and Zoning Commission is correct and the information provided in the Exhibit Booklet is self-explanatory; that the proposed use is for a pole barn for the Applicant's landscaping business and a parking lot for employees; that shown on the site plan is a future building with a septic system; that they have an approved site evaluation for an on-site septic system; however, current plans consist only of a pole building and a porta-toilet on the site.

Mr. Lank reported that comments received from the Engineering Department state that the area will be served with sewer service in the future and that when the County does provide the service, connection will be mandatory.

There were no public comments and the Public Hearing was closed.

M 256 13 Adopt Ordinance No. 2306 (C/U No. 1961)

A Motion was made by Mr. Cole, seconded by Mr. Phillips, to Adopt Ordinance No. 2306 entitled "AN ORDINANCE TO GRANT A CONDITIONAL USE OF LAND IN AN AR-1 AGRICULTURAL RESIDENTIAL DISTRICT FOR A LANDSCAPING BUSINESS TO BE LOCATED ON A CERTAIN PARCEL OF LAND LYING AND BEING IN INDIAN RIVER HUNDRED, SUSSEX COUNTY, CONTAINING 0.997 ACRE, MORE OR LESS" (Conditional Use No. 1961) filed on behalf of Rendell Whibley and Ann Marie Whibley, with the following conditions:

1) **The use shall be limited to a landscaping business without any retail sales occurring on the site.**
2) **No exterior storage shall be permitted on the site. All storage shall be inside of the pole building proposed by the Applicant or a similar structure.**
3) **There shall not be any disturbance of the wetlands located on the site.**

DRAFT

M 256 13 Adopt Ordinance No. 2306 (C/U No. 1961) (continued)

4) Any security lighting shall be downward screened so that it does not shine on neighboring properties or roadways.
5) One sign, lighted or unlighted, shall be permitted. It shall be no larger than 32 square feet per side.
6) The hours of operation, as proposed by the Applicant, shall be from 7:00 a.m. to 6:00 p.m. Monday through Friday, and 7:00 a.m. to Noon on Saturdays.
7) All equipment repairs shall occur indoors.
8) The Final Site Plan shall be subject to the review and approval of the Sussex County Planning and Zoning Commission.

Motion Adopted: 5 Yeas.

Vote by Roll Call: Mrs. Deaver, Yea; Mr. Cole, Yea; Mr. Phillips, Yea; Mr. Wilson, Yea; Mr. Vincent, Yea

Public Hearing/ C/U No. 1962

A Public Hearing was held on the Proposed Ordinance entitled "AN ORDINANCE TO GRANT A CONDITIONAL USE OF LAND IN AN AR-1 AGRICULTURAL RESIDENTIAL DISTRICT FOR A COMPOSTING FACILITY AS AN EXTENSION TO CONDITIONAL USE NO. 1314 AND CONDITIONAL USE NO. 1691 (A MICRO-NUTRIENT PLANT WITH RELATED TRUCK ENTRANCE AND RAIL SPUR FOR THE PROCESSING AND HANDLING OF POULTRY LITTER) TO BE LOCATED ON A CERTAIN PARCEL OF LAND LYING AND BEING IN BROAD CREEK HUNDRED, SUSSEX COUNTY, CONTAINING 228.88 ACRES, MORE OR LESS" (Conditional Use No. 1962) filed on behalf of Chesapeake AgriSoil, LLC.

The Planning and Zoning Commission held a Public Hearing on this application on April 25, 2013 at which time the Commission deferred action for further consideration.

(See the minutes of the Planning and Zoning Commission dated April 25, 2013.)

Lawrence Lank, Director of Planning and Zoning, read a summary of the Commission's Hearing.

Exhibit Books, which were provided by the Applicant, were distributed to the Council.

The Council found that Shannon Carmean-Burton, Attorney, was present on behalf of the application along with Ken Christenbury, Professional Engineer with Axiom Engineering, LLC; Whitney Hall, Professional Engineer; Wayne Hudson of Perdue Agri-Recycle, LLC, and Charlie Gifford of Chesapeake AgriSoil, LLC. They stated in their presentations that the proposed use will occupy approximately 20 acres of the 228.88 acre site; that the 20 acre portion is contained within Tax Map I.D. 1-32-11.00

DRAFT

Public Hearing/ C/U No. 1962 (continued)

Parcel 41,00; that the site is immediately adjacent to the plant; that the existing wooded buffers will remain; that the site is being cleared to eliminate young seedlings and tree growth; that no clearing will occur beyond the railroad spur; that the original conditions for the micro-nutrient plant, as amended in 2006, will remain with the exception of the use of this facility; that DelDOT voiced no objections; that DNREC approvals are required and will be obtained; that they will be handling 110,000 tons of material; that this use is an alternative to land application; that the EPA supports the use of animal waste composting; that lab testing of stock prior to process and the final product will be performed; that the use is a natural process; that the only additive is air; that the process starts in an enclosed building where the mixing process starts; that the material is then hauled outdoors onto the site and then covered with Gore material; that the material remains covered for approximately four (4) weeks (1st Phase); then the covers are removed for two (2) weeks (2nd Phase) which establishes the compost product; then air is blown into the system for six (6) to eight (8) weeks improving the soil compost to a high quality (3rd Phase); that the 1st Phase will have 15 cover systems, the 2nd Phase will have 8 cover systems, and the 3rd Phase will have 19 cover systems; that the final product is then removed, placed in trucks, and hauled away; that the Gore System covers odors and does not allow rain water to get into the system; that the water runoff on-site is recycled; that aeration trenches are proposed under each cover system; that the technology is well proven; that there are many projects throughout the United States and Worldwide that use this technology; that the final product is very light in weight and will improve soil quality; that Perdue Agri-Recycle, LLC supports the proposed facility since processed water from the Plant would be utilized in this process rather than having to haul the processed water off-site for land application; that according to DelDOT there will not be any traffic impact; that there is a substantial distance from the site of the proposed facility to the nearest dwelling on other property; that they have met with the Sussex Conservation District and have been advised that permits and approvals will be required; that Best Management Practices will be utilized; that the proposed project is very environmentally responsible; that water will be re-cycled on-site; that the micro-nutrient plant does not process dead birds; that the finished product will be hauled away by truck to farm fields, landscapers, and possibly some large providers of bagged mulch/compost products; that the operation will be carried on during one daytime shift from 7:00 a.m. to 5:00 p.m. weekdays only; that water can be provided to control any dust; that the intended 20 acre area for the facility includes the stormwater management pond; that they may utilize dead birds in a catastrophic emergency situation; that they anticipate 12 full-time employees, and assume approximately eight (8) secondary related service jobs; that they will most likely be using independent haulers; that the purpose of the AR-1 includes references to provide for a full range of agricultural activities and to protect agricultural lands and protect established agricultural operations and activities; that the permitted conditional uses in the AR-1 District include agricultural related activities; that the use is of a public or semi-public character in that it provides an

DRAFT

Public Hearing/ C/U No. 1962 (continued)

innovative but environmentally sound method of disposing of poultry waste in a commercially reasonable manner and will decrease the amount of pollution and odor from poultry waste previously applied directly to the soils as a fertilizer; that the proposed use will provide community wide benefits and the ability to recycle a by-product of the poultry industry utilizing the latest Gore technology; that due to the need for enhancing the ability of the poultry industry to protect the local environment, the proposed conditional use is an appropriate zoning method for permitting the use; thus, the proposed conditional use complies with the Zoning Code; that the Applicant submits that this project is consistent with the provisions of the Comprehensive Plan which identifies the property in a Low Density Area; that the Plan provides that all land designated in the Low Density Area are currently zoned AR-1; that the Plan provides that the primary uses envisioned in Low Density Areas are agricultural activities and single family detached homes; that industrial uses that support or depend on agriculture should be permitted; that the Gore system proposed to be utilized uses positive aeration and a specially designed cover to create an enclosed system that optimizes the recycling process, controls odors and micro-organisms, separates leachate from storm water and creates a consistent product unaffected by outside environmental conditions; that the use is designed to benefit the family farm and agricultural industry, especially poultry growers, in the County; that the application meets the purpose and goal of the Plan and is for the purpose of promoting the health, safety, moral, convenience, order and prosperity and welfare of the present and future inhabitants of the County; and that Tab 15 of the Exhibit Booklet contains suggested reasons and suggested conditions of approval for consideration.

Public comments were heard.

Doug Parham was in attendance representing the Inland Bays Foundation and he stated that the Foundation strongly supports the approval of the application for the implementation of their state-of-the-art composting facility. He stated that recent correspondence from Ed Kee, Delaware Secretary of Agriculture, mirrors their thoughts. He stated that Delaware, like all of Delmarva has significant excess amounts of chicken litter that needs to be disposed of; that the State passed a law a few years ago prohibiting anyone from placing yard waste in public landfills; that the compositing initiative is an excellent potential solution for the disposal of yard waste and reduction of litter applied to our fields – 40,000 tons annually; that the proposal will create new revenue for farmers, new green jobs, and will reduce nutrient pollution entering the Bays; and that it is low risk and at no cost to the taxpayer.

William Mitten and Larry Rice (property owners close to the site of the application) both stated that they were previously in opposition to the application; however, after speaking with representatives of the application about the process and with the additional information provided, they are now in support of the application as their concerns have been addressed.

DRAFT

Public Hearing (continued)

There were no comments in opposition to the application.

The Public Hearing and Public Record were closed.

M 257 13 Defer Action on C/U No. 1962

A Motion was made by Mr. Cole, seconded by Mr. Phillips, to defer action on Conditional Use No. 1962 filed on behalf of Chesapeake AgriSoil, LLC.

Motion Adopted: **5 Yeas.**

Vote by Roll Call: **Mrs. Deaver, Yea; Mr. Cole, Yea; Mr. Phillips, Yea; Mr. Wilson, Yea; Mr. Vincent, Yea**

M 258 13 Adjourn

A Motion was made by Mr. Cole, seconded by Mrs. Deaver, to adjourn at 3:21 p.m.

Motion Adopted: **5 Yeas.**

Vote by Roll Call: **Mrs. Deaver, Yea; Mr. Cole, Yea; Mr. Phillips, Yea; Mr. Wilson, Yea; Mr. Vincent, Yea**

Respectfully submitted,

Robin A. Griffith
Clerk of the Council

DRAFT

ENGINEERING DEPARTMENT

ADMINISTRATION	(302) 855-7718
AIRPORT & INDUSTRIAL PARK	(302) 855-7774
ENVIRONMENTAL SERVICES	(302) 855-7730
PUBLIC WORKS	(302) 855-7703
RECORDS MANAGEMENT	(302) 854-5033
UTILITY ENGINEERING	(302) 855-7717
UTILITY PERMITS	(302) 855-7719
UTILITY PLANNING	(302) 855-1299
FAX	(302) 855-7799

Sussex County
DELAWARE
sussexcountyde.gov

MICHAEL A. IZZO, P.E.
COUNTY ENGINEER

BRAD HAWKES
DIRECTOR OF UTILITY ENGINEERING

May 20, 2013

FACT SHEET

SUSSEX COUNTY PROJECT 81-04
WARRINGTON CREEK - PHASE 9 (A/K/A SAWGRASS)
AGREEMENT NO. 378 - 4

DEVELOPER:

Mr. Michael Accardi
Sawgrass South, L.L.C.
1300 Piccard Drive
Suite 103
Rockville, MD 20850

LOCATION:

South East Side of Old Landing Road

SANITARY SEWER DISTRICT:

West Rehoboth Expansion of the Dewey Beach Sanitary Sewer District

TYPE AND SIZE DEVELOPMENT:

28 Single Family Lots

SYSTEM CONNECTION CHARGES:

$132,020.00

SANITARY SEWER APPROVAL:

Sussex County Engineering Department Plan Approval
02/04/05

Department Of Natural Resources Plan Approval
03/14/05

SANITARY SEWER CONSTRUCTION DATA:

Construction Days – 45
Construction Admin And Construction Inspection Cost – $16,056.04
Proposed Construction Cost – $107,040.25

ENGINEERING DEPARTMENT

ADMINISTRATION	(302) 855-7718
AIRPORT & INDUSTRIAL PARK	(302) 855-7774
ENVIRONMENTAL SERVICES	(302) 855-7730
PUBLIC WORKS	(302) 855-7703
RECORDS MANAGEMENT	(302) 854-5033
UTILITY ENGINEERING	(302) 855-7717
UTILITY PERMITS	(302) 855-7719
UTILITY PLANNING	(302) 855-1299
FAX	(302) 855-7799

Sussex County
DELAWARE
sussexcountyde.gov

MICHAEL A. IZZO, P.E.
COUNTY ENGINEER

BRAD HAWKES
DIRECTOR OF UTILITY ENGINEERING

June 4, 2013

PROPOSED MOTION

BE IT MOVED THAT BASED UPON THE RECOMMENDATION OF THE SUSSEX COUNTY ENGINEERING DEPARTMENT, FOR SUSSEX COUNTY PROJECT NO. 81-04, AGREEMENT NO. 378-4, THAT THE SUSSEX COUNTY COUNCIL EXECUTE A CONSTRUCTION ADMINISTRATION AND CONSTRUCTION INSPECTION AGREEMENT BETWEEN SUSSEX COUNTY COUNCIL AND "SAWGRASS SOUTH, L.L.C.", FOR WASTEWATER FACILITIES TO BE CONSTRUCTED IN “WARRINGTON CREEK – PHASE 9 (A/K/A SAWGRASS)", LOCATED IN THE WEST REHOBOTH EXPANSION OF THE DEWEY BEACH SANITARY SEWER DISTRICT.

ORDINANCE NO. 38
AGREEMENT NO. 378-4

TODD LAWSON
COUNTY ADMINISTRATOR

ENGINEERING DEPARTMENT

ADMINISTRATION	(302) 855-7718
AIRPORT & INDUSTRIAL PARK	(302) 855-7774
ENVIRONMENTAL SERVICES	(302) 855-7730
PUBLIC WORKS	(302) 855-7703
RECORDS MANAGEMENT	(302) 854-5033
UTILITY ENGINEERING	(302) 855-7717
UTILITY PERMITS	(302) 855-7719
UTILITY PLANNING	(302) 855-1299
FAX	(302) 855-7799

Sussex County
DELAWARE
sussexcountyde.gov

MICHAEL A. IZZO, P.E.
COUNTY ENGINEER

BRAD HAWKES
DIRECTOR OF UTILITY ENGINEERING

May 10, 2013

FACT SHEET

SUSSEX COUNTY PROJECT 81-04
SEAGRASS PLANTATION - REVISION 2 - PHASE 4
AGREEMENT NO. 502 - 5

DEVELOPER:

Mr. James Duszynski
Corona Seagrass Plantation L.L.C.
11951 Freedom Dr.
Suite 1300
Reston, VA 20190

LOCATION:

County Road 348 Irons Lane

SANITARY SEWER DISTRICT:

Holts Landing Sanitary Sewer District

TYPE AND SIZE DEVELOPMENT:

39 single family lots.

SYSTEM CONNECTION CHARGES:

$242,658.00

SANITARY SEWER APPROVAL:

Sussex County Engineering Department Plan Approval
03/26/10

Department Of Natural Resources Plan Approval
12/01/08

SANITARY SEWER CONSTRUCTION DATA:

Construction Days – 75
Construction Admin And Construction Inspection Cost – $35,727.90
Proposed Construction Cost – $238,186.00

ENGINEERING DEPARTMENT

ADMINISTRATION	(302) 855-7718
AIRPORT & INDUSTRIAL PARK	(302) 855-7774
ENVIRONMENTAL SERVICES	(302) 855-7730
PUBLIC WORKS	(302) 855-7703
RECORDS MANAGEMENT	(302) 854-5033
UTILITY ENGINEERING	(302) 855-7717
UTILITY PERMITS	(302) 855-7719
UTILITY PLANNING	(302) 855-1299
FAX	(302) 855-7799

Sussex County
DELAWARE
sussexcountyde.gov

MICHAEL A. IZZO, P.E.
COUNTY ENGINEER

BRAD HAWKES
DIRECTOR OF UTILITY ENGINEERING

June 4, 2013

PROPOSED MOTION

BE IT MOVED THAT BASED UPON THE RECOMMENDATION OF THE SUSSEX COUNTY ENGINEERING DEPARTMENT, FOR SUSSEX COUNTY PROJECT NO. 81-04, AGREEMENT NO. 502-5, THAT THE SUSSEX COUNTY COUNCIL EXECUTE A CONSTRUCTION ADMINISTRATION AND CONSTRUCTION INSPECTION AGREEMENT BETWEEN SUSSEX COUNTY COUNCIL AND "CORONA SEAGRASS PLANTATION, L.L.C.", FOR WASTEWATER FACILITIES TO BE CONSTRUCTED IN “SEAGRASS PLANTATION-REVISION 2-PHASE 4”, LOCATED IN HOLTS LANDING SANITARY SEWER DISTRICT.

ORDINANCE NO. 38
AGREEMENT NO. 502-5

TODD LAWSON
COUNTY ADMINISTRATOR

SUSSEX COUNTY
CHANGE ORDER REQUEST

A. ADMINISTRATIVE

1. Project Name: **GREENWOOD LIBRARY**

2. Sussex County Contract No. **07-05**

3. Change Order No. **1**

4. Date Change Order Initiated **05/30/2013**

5. a. Original Contract Sum **$2,768,572.00**

   b. Net Change by Previous Change Orders **0**

   c. Contract Sum Prior to Change Order **$2,768,572.00**

   d. Requested Change **$5,110.36**

   e. Net Change (No. of days) **4**

   f. New Contract Amount **$2,773,682.36**

6. Sussex County Contact Person **Michael A. Izzo, P.E.**

   Telephone **(302) 855-7718**

B. REASONS FOR CHANGE ORDER

X 1. Differing Site Conditions

_ 2. Errors and Omissions in Construction Drawings and Specifications

X 3. Changes Instituted by Regulatory Requirements

X 4. Design Change

_ 5. Overrun/Underrun in Quantity

X 6. Factors Affecting Time of Completion

X 7. Other (explain below)

C. BRIEF DESCRIPTION OF CHANGE ORDER

1. Unsuitable subgrade for building concrete and for pavement areas removed and replaced.
3. Fire Marshal approval required additional work items.
4. Steel subcontractor's required engineering of building necessitated additions to foundation.
6. One weather day (Hurricane Sandy with a State of Emergency declared by the Delaware Governor); three weather days in January 2013 due to temperature too low for curing concrete.
7. Items adjusted during course of work.

D. JUSTIFICATION FOR CHANGE ORDER INCLUDED?

Yes X No _

E. APPROVALS

1. Richard Y. Johnson & Son, Inc., Project General Contractor

5-30-13

Signature Date

Jesse L. Dixon

Representative's Name in Block Letters

2. Sussex County Engineer

Signature Date

3. Davis, Bowen & Friedel, Inc., Project Consultant

Signature Date

GREENWOOD LIBRARY CHANGE ORDER #1				Contract Amount	
DESCRIPTION	DEBIT	CREDIT	DAYS	$ 2,768,572.00	CO TOTAL
OCTOBER 28, 2012, STATE OF EMERGENCY			1	$ 2,768,572.00	$0.00
REMOVE & REPLACE-PAD SUBGRADE-11/12-14/2012	$1,907.73			$ 2,770,479.73	$1,907.73
FIRE MARSHAL ADDITIONS	$1,501.50			$ 2,771,981.23	$3,409.23
FOUNDATION REVISIONS	$737.00			$ 2,772,718.23	$4,146.23
WEATHER DAYS 01/15,16,17/2013			3	$ 2,772,718.23	$4,146.23
DEL.NAPKIN DISP'S&RM.106 INT.WDW;ADD TRIM LAPTOP DESK		(438.37)		$ 2,772,279.86	$3,707.86
REMOVE & REPLACE-PARKING LOT SUBGRADE 5/14-15/2013	$1,402.50			$ 2,773,682.36	$5,110.36

RICHARD Y. JOHNSON & SON INC.
General Contractor/Construction Mgrs
P.O. Box 105
LINCOLN, DELAWARE 19960
(302) 422-3732
(302)422-4696 fax

Change Order Proposal 1

Job Phone	Date December 3, 2012
Job Location: Greenwood Public Library	
Greenwood, Delaware	
Job Number:	Architect:
DBF # 1897B003	Davis, Bowen & Friedel, Inc.

TO:

Sussex County
2 The Circle
Georgetown, Delaware 19947

We hereby submit specifications and estimates for:

Time Extension = 1 Day based on State Mandated "State of Emergency" no employees or subcontractors could report to work.

Previous Substantial Completion Date: October 28, 2013

Updated Substantial Completion Date: October 29, 2013

For the Sum of: Zero Dollars $0.00

All material is guaranteed to be as specified. All work to be completed in a workmanlike manner according to standard industry practices. Any alteration or deviation from the above specifications involving extra cost will be executed only upon written orders, and will become an extra charge over and above the estimate. All agreements contingent upon strikes, accidents or delays beyond our control. Owner to carry fire, tornado and other necessary insurance. Our workers are fully covered by Workman's Compensation Insurance. This proposal may be withdraw by us if not accepted within Thirty (30) days.

Accepted By: _____

Date: _____

Jesse Dixon – Project Manager

RICHARD Y. JOHNSON & SON INC.
General Contractor/Construction Mgrs
P.O. Box 105
LINCOLN, DELAWARE 19960
(302) 422-3732
(302)422-4696 fax

Change Order Proposal 2

Job Phone	Date December 3, 2012
Job Location: Greenwood Public Library	
Greenwood, Delaware	
Job Number:	Architect:
DBF # 1897B003	Davis, Bowen & Friedel, Inc.

TO:

Sussex County
2 The Circle
Georgetown, Delaware 19947

We hereby submit specifications and estimates for:

Unsuitable Soils encountered at Building Pad (See attached clarification from Hillis-Carnes Report)	
November 12, 2012: Remove additional Soils: 55.56 cubic yards	
November 14, 2012: Remove additional Soils: 60.06 cubic yards	
Total Unsuitable Soils: 115.62 cubic yards x $15.00/cubic yards	
Cost:	$1,734.30
RYJ OH&P (10%)	$173.43
Total:	$1,907.73

For the Sum of: One Thousand Nine Hundred and Seven Dollars & 73 Cents $1,907.73

All material is guaranteed to be as specified. All work to be completed in a workmanlike manner according to standard industry practices. Any alteration or deviation from the above specifications involving extra cost will be executed only upon written orders, and will become an extra charge over and above the estimate. All agreements contingent upon strikes, accidents or delays beyond our control. Owner to carry fire, tornado and other necessary insurance. Our workers are fully covered by Workman's Compensation Insurance. This proposal may be withdraw by us if not accepted within Thirty (30) days.

Accepted By: _____

Date: _____

Jesse Dixon – Project Manager

HILLIS-CARNES ENGINEERING ASSOCIATES
503 Maryland Ave. Unit 106
Delmar, MD 21875
(410) 749-0940 (410) 896-3478

LETTER OF TRANSMITTAL

November 19, 2012

Richard Y Johnson & Son, Inc.
18404 Johnson Rd
PO Box 105
Lincoln, DE 19960

ATTN: Jesse Dixon

RE: **Greenwood Public Library**

HCEA Job # **S12216**

Location: **Greenwood, DE**

We are enclosing:

__X__ Materials Engineering Division Reports

_____ Materials Laboratory Reports

CC: **HCEA - Vernon**

ENCL:

Daily Report	11/12/2012	2012_11_12_mloring_Daily_5.PDF
Daily Report	11/14/2012	2012_11_14_mloring_Daily_6.pdf
Daily Report	11/14/2012	2012_11_14_mloring_Daily_3.pdf
Daily Report	11/14/2012	2012_11_14_mloring_Daily_4.pdf

HILLIS-CARNES
ENGINEERING ASSOCIATES

503 Maryland Ave. Unit 106
Delmar, MD 21875
Phone:410-749-0940 Fax:410-896-3478

FIELD REPORT

Subgrade Improvements

Report No.: 1
Project No.: S12216
Project Name: Greenwood Public Library
Client: Richard Y. Johnson
Contractor: Gateway Construction

Date: Nov 12, 2012
Weather/Temp: Clear / 50
Travel Time: 1.5 hr
On Site Time: 6.5 hr
Lunch Time: --- hr
Total Time: 8.0 hr

A. Description of Work:
An HCEA engineering technician arrived on site to perform a proofroll inspection for the proposed Building Pad of the Greenwood Library project. Upon arrival Technician found the previous Greenwood Library building to be removed and the Building Pad elevation to be 47.90 at the West end (highest point) and 43 in the middle of the Building Pad (lowest point) the Building Pad sloped from West to East. Technician was informed by Richard Y. Johnson that the contractor had removed the topsoil that was contractually obligated from the Building Pad in all but the West section. Technician instructed the contractor to dig 5 test pits, the four Building Pad corners and one in the middle of the Building Pad. Technician found the subgrade material to range from 6" to 12" of organic silt OL/ML followed by 3 feet of silty Clay at all locations. The Geotechnical report provided by John D. Hynes and Associates indicated organic bearing soils ranging from 14" to 18" below existing grade.

HCEA recommended to remove all organic material from the Building Pad, but no more then 12" without supervision of and HCEA representative. Richard Y. Johnson representative (George) informed HCEA that he would monitor the excavation problems and contact HCEA if additional organic material was found.

Technician returned in the afternoon and found an area approximately 30' x 50' in the middle of the building pad was overexcavated approximately 1' in depth to remove additional organic soils (55.56 cubic yards). This area was where the original building was previously located.

Technician then conducted a proofroll inspection using a fully loaded tandem axle dump truck on the proposed Building Pad section that was prepared, between Column lines G to Q, Grid Lines 1 to 16. Two areas of deflection were found in the portion of the Building Pad. HCEA made the following recommendations in the two areas:

B. Tests Performed
Proofroll

C. Problems
See Above

D. Equipment & Crew
One Engineering Technician

A. Description of Work (continued):

Section 1
Area approximately 8' x 12' found to be 4' of wet organic silt. HCEA recommended to overexcavate the organic material.

Section 2
Area approximately 5' x 10' found to be a tree stump that was buried beneath existing grade. HCEA recommended to overexcavate the stump and organic material surrounding to stump.

See attached sketch for approximate locations of deflecting area.

Richard Y. Johnson requested HCEA to return on Wednesday November 14, 2012 to monitor the overexcavation of the two deflecting areas.

A total of 55.56 cubic yards of material was overexcavated on this date.

Verification: _____ **Reviewed By:** Vernon Opdyke **Technician:** **M. Loring**

DAILY REPORT

HILLIS-CARNES

ENGINEERING ASSOCIATES, INC

Report No. 1 Job No. 512216 Date: 11-12-12 By: M. Loring

PROJECT NAME: Greenwood Public Library Client: Richard Y. Johnson

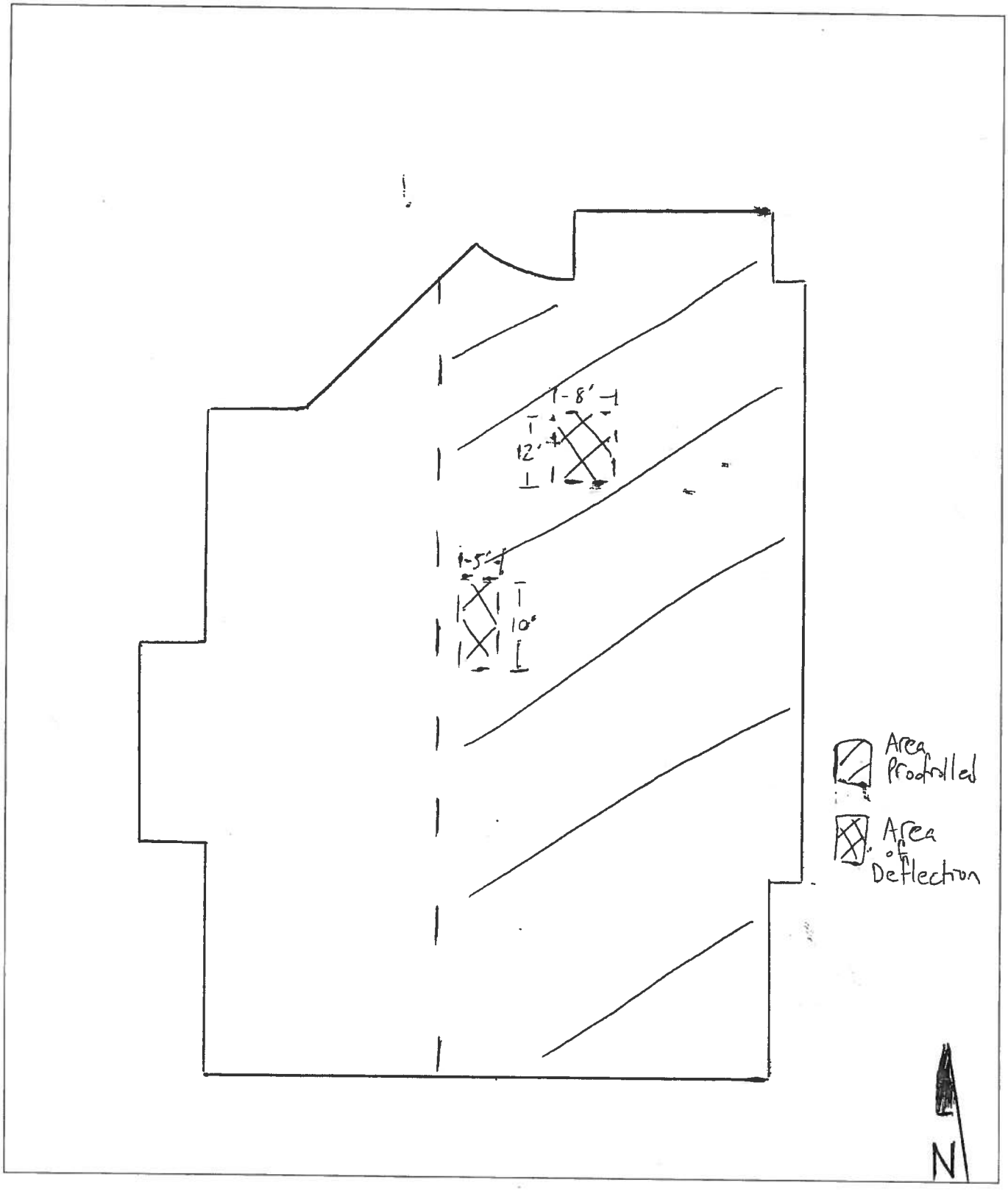

HILLIS-CARNES
ENGINEERING ASSOCIATES

503 Maryland Ave. Unit 106
Delmar, MD 21875
Phone:410-749-0940 Fax:410-896-3478

FIELD REPORT

Subgrade Improvements

Report No.: 2
Project No.: S12216
Project Name: Greenwood Public Library
Client: Richard Y. Johnson
Contractor: Gateway Construction

Date: Nov 14, 2012
Weather/Temp: Clear / 50
Travel Time: 1.5 hr
On Site Time: 8.5 hr
Lunch Time: .50 hr
Total Time: 9.5 hr

A. Description of Work:
An HCEA engineering technician arrived on site to monitor subgrade improvements for two deflecting sections of the building pad previously identified by HCEA on Monday 11-12-2012, see M. Loring report. The sections are identified on the attached sketch. HCEA instructed the contractor where and how far to overexcavate the referenced areas. The following excavations were made on this date:

Section 1
Area approximately 12' Long x 11' Wide x 5' Depth (24.44 cubic yards)
Contractor removed an abandoned septic tank from this area. The septic tank was full of organic silt and water.

Section 2
Area approximately 14' Long x 10' Wide x 3-1/2' Depth (18.15 cubic yards)
Contractor removed organic silts and organic matter (tree stump).

Section 3
Area approximately 14' Long x 3-1/2' Wide x 18" Depth (2.72 cubic yards)
Contractor removed organic silts and organic matter (tree stump).

The three sections were backfilled with structural fill from Porter's Sand & Gravel in 12" loose lifts. Technician administered field density testing using the Nuclear Method in accordance with ASTM D 2922. The sections were compacted and re-compacted until all locations met the required 95% compaction specification.

HCEA also conducted a proofroll inspection for the remaining portion (West side) of the Building Pad. The proofroll was conducted using a fully loaded tandem axle dump truck provided by Gateway Construction. An area of deflection approximately 15' x 15' was found in the Northwest corner. HCEA instructed the contractor to dig a test pit

B. Tests Performed
Subgrade Improvements

C. Problems
See Above

D. Equipment & Crew
One Engineering Technician

A. Description of Work (continued):

in order to identify the cause of the deflection. Technician found the subgrade material to be 2' of wet, loose silty Clay followed by moist, firm silty Clay. HCEA recommended the following re mediations:

1. Allow the subgrade material to dry with no construction activity on the deflecting area until Monday 11-19-2012. HCEA will return Monday to conduct a proofroll inspection.
2. Over excavate the wet, loose silty Clay to the moist, firm silty Clay and backfill with select fill.
3. Mix Portland Cement in the wet, loose silty Clay to speed up the drying process.

Richard Y. Johnson discussed the three options with Sussex County utility Engineering Department and determined that option # 2 would be the most cost effective and efficient way to repair the deflecting area. HCEA was instructed to monitor the overexcavation of the deflecting area.

HCEA instructed the contractor to overexcavate all wet, loose silty Clay from the above referenced area. During overexcavation technician noticed water was leaching into the excavated area from the Northwest side wall. Technician used a shovel to excavate the area where water was flowing out of the sidewall. Technician excavated a hole approximately 12" in Diameter approximately 3' laterally of saturated silty Clay and water. HCEA recommended to overexcavate this material until it was out of the building pad. The contractor overexcavated all the saturated material and it was determined that perched water was built up in a bed or aggregate that was previously buried at the corner of the proposed building pad. HCEA instructed the contractor to remove all the aggregate and saturated silty Clay and to backfill with structural fill material. The area overexcavated totaled to be 14.74 cubic yards. See attached sketch for dimensions.

Technician monitored gateway Construction backfill the area in four, 12" loose lifts. Technician administered field density testing at each lift. Each lift was compacted and re-compacted until all areas met the required 95% compaction specification.

Gateway Construction proceeded to place a 12" loose lift of structural fill on half of the proposed Building Pad, between Column Lines J to Q; Grid Lines 1 to 16. The entire section was compacted and re-compacted until all tests met the required 95% compaction specification.

A total of 60.06 cubic yards of material was overexcavated from the proposed Building Pad on this date.

Verification: _____ **Reviewed By:** *Vernon Opdyke* **Technician:** **M. Loring**

DAILY REPORT

HILLIS-CARNES

ENGINEERING ASSOCIATES, INC

Report No. 2 Job No. 512216 Date: 11-14-2012 By: M. Loring

PROJECT NAME: Greenwood Public Library Client: Richard Y. Johnson

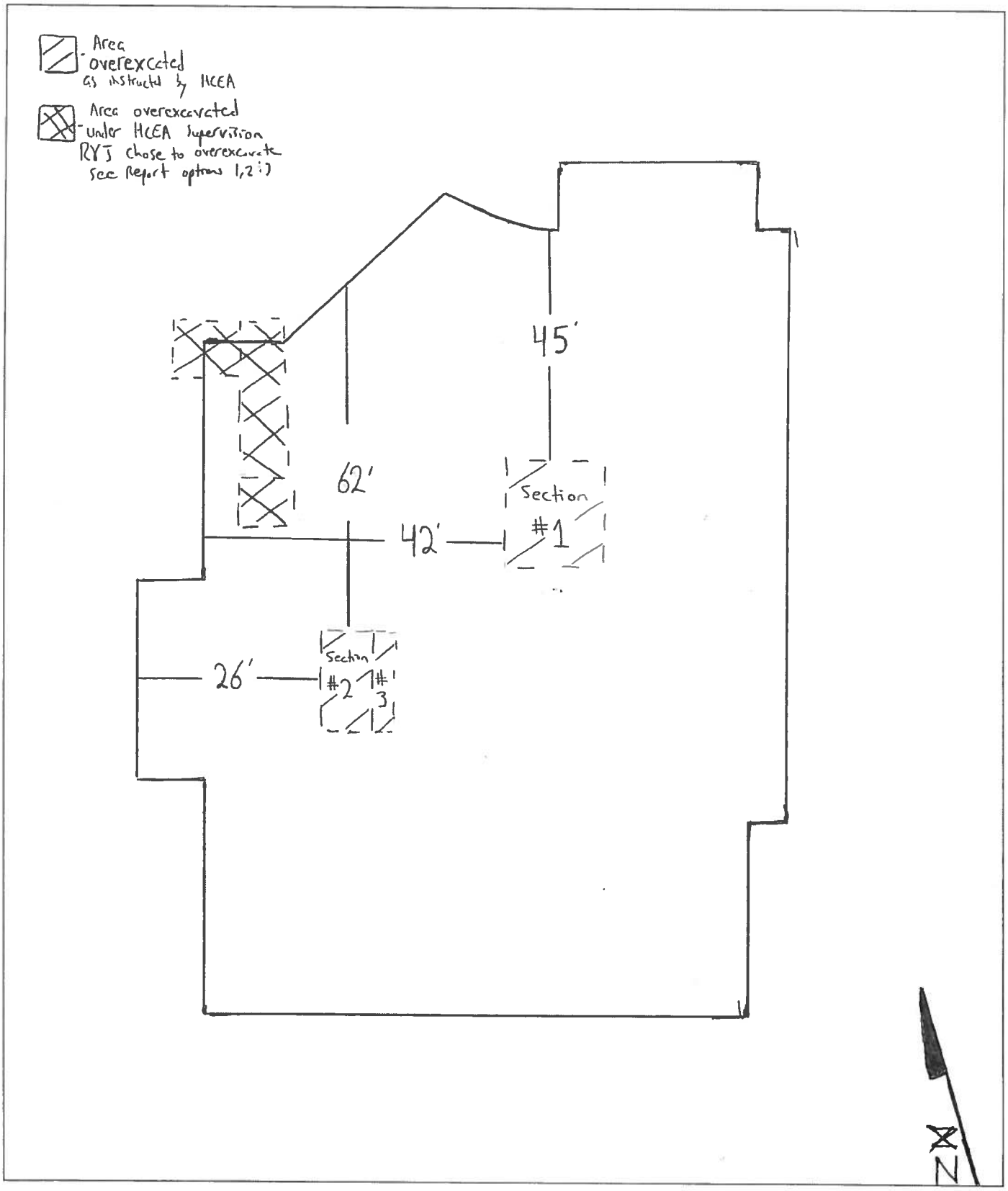

RICHARD Y. JOHNSON & SON INC.
General Contractor/Construction Mgrs
P.O. Box 105
LINCOLN, DELAWARE 19960
(302) 422-3732
(302)422-4696 fax

Change Order Proposal 3

Job Phone	Date December 3, 2012
Job Location: Greenwood Public Library	
Greenwood, Delaware	
Job Number:	Architect:
DBF # 1897B003	Davis, Bowen & Friedel, Inc.

TO:

Sussex County
2 The Circle
Georgetown, Delaware 19947

We hereby submit specifications and estimates for:

Proposal Based on Sketches CO 1.1, CO 1.2, CO 1.3, CO 1.4, CO 1.5	
2- Fire Extinguishers (A&F Quote Attached)	$390.00
42" Handrail (Custom Welding Quote Attached)	$975.00
Subtotal:	$1,365.00
RYJ (OH&P) 10%	136.50
Total:	$1501.50

For the Sum of: One Thousand Five Hundred and One Dollars & 50 Cents $1,501.50

All material is guaranteed to be as specified. All work to be completed in a workmanlike manner according to standard industry practices. Any alteration or deviation from the above specifications involving extra cost will be executed only upon written orders, and will become an extra charge over and above the estimate. All agreements contingent upon strikes, accidents or delays beyond our control. Owner to carry fire, tornado and other necessary insurance. Our workers are fully covered by Workman's Compensation Insurance. This proposal may be withdraw by us if not accepted within Thirty (30) days.

Accepted By: _____

Date: _____ Jesse Dixon – Project Manager

CUSTOM WELDING & FABRICATING, INC.
CAMBRIDGE MD 21613

CHANGE ORDER

DATE	INVOICE #
11/29/2012	23033

BILL TO

RICHARD Y JOHNSON & SON, INC.
18404 JOHNSON ROAD
P. O. BOX 105
LINCOLN, DE 19960

P.O. NO.	TERMS	DUE DATE	SENT	JOB #
	Due on receipt	11/29/2012		

QUANTITY	DESCRIPTION	U/M	RATE	AMOUNT
1	Greenwood Library Furnish and install 42" high guardrail as shown on CO1.2		975.00	975.00

Thank you for your business.

Sales Tax (6.0%)	$0.00
Total	$975.00
Payments/Credits	$0.00
Balance Due	$975.00

Phone #	Fax #
410 228 4200	410 228 7945

A & F PRODUCTS, INC.

Flag Poles • Toilet Partitions • Bathroom Accessories
Fire Extinguishers & Cabinets

26869 BLUE HERON WAY • LONGNECK, DE 19966

FAX (302) 947-4491

(302) 947-4490

Dec. 3,2012
DATE

FAX TRANSMISSION SHEET

TO: Richard Y. Johnson & Son Inc. ATTN. Jesse Dixon

"QUOTE"

FROM:

A & F PRODUCTS

RE: Greenwood Public Librart

1. We propose to Furnish & Install (2) Fires Extinguisher
2. Cabinets and 10lb Fire Extinguisher as per plans & Specks
3. for the Sum of $390.00
4.
5.
6.
7.
8.
9.
10.

David W. French

Signature

E-MAIL
Dwfrenchy@verizon.net

DAVIS
BOWEN &
FRIEDEL, INC.

ARCHITECTS ENGINEERS SURVEYORS

FAX / MEMORANDUM

Date: 11/1/2012
To: Jesse Dixon, Richard Y Johnson & Son
From: Chris Cullen
Re: Greenwood Public Library
Fax:

Please provide a change order proposal for adding, 2 fire extinguishers & cabinets and additional 42" high guardrails as detailed on the attached drawings, CO 1.1, CO 1.2, CO1.3, CO1.4 and CO1.5.

Call /email with any questions about the scope of changes. My cell is 410-713-5736 (our office phones are down at the moment due to the storm)

Thanks.

Salisbury Office Phone 410-543-9091 Fax 410-453-4172 Email clc@dbfin.com

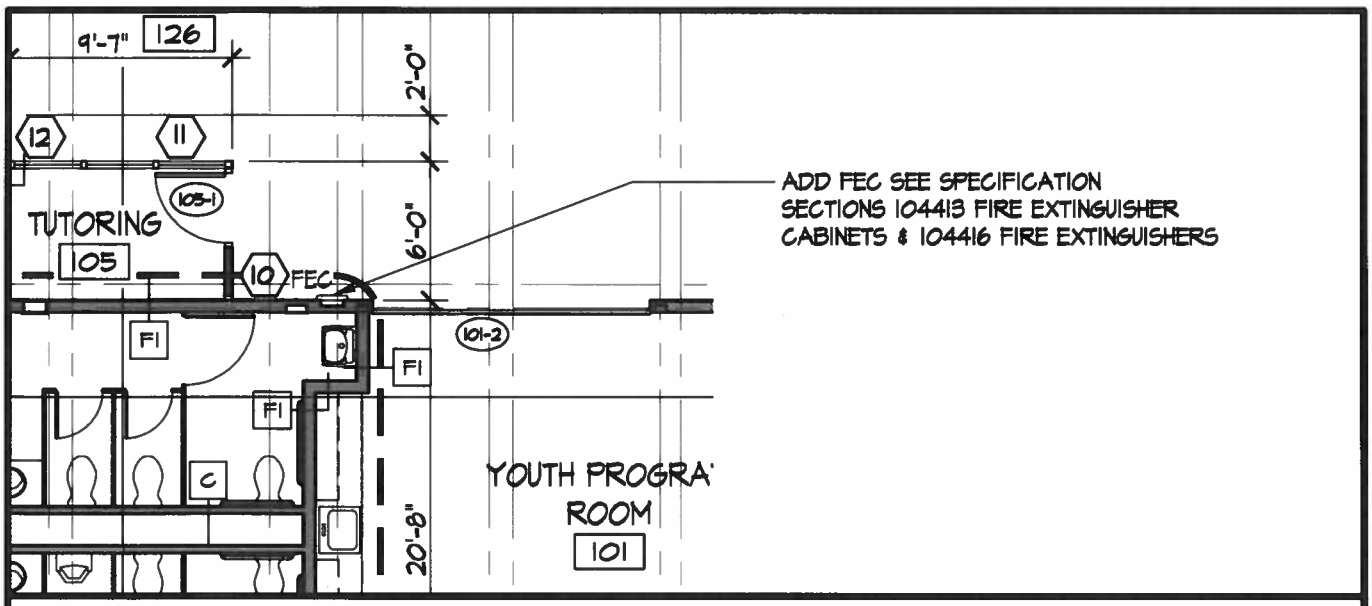

PARTIAL PLAN

1/8"=1'-0"

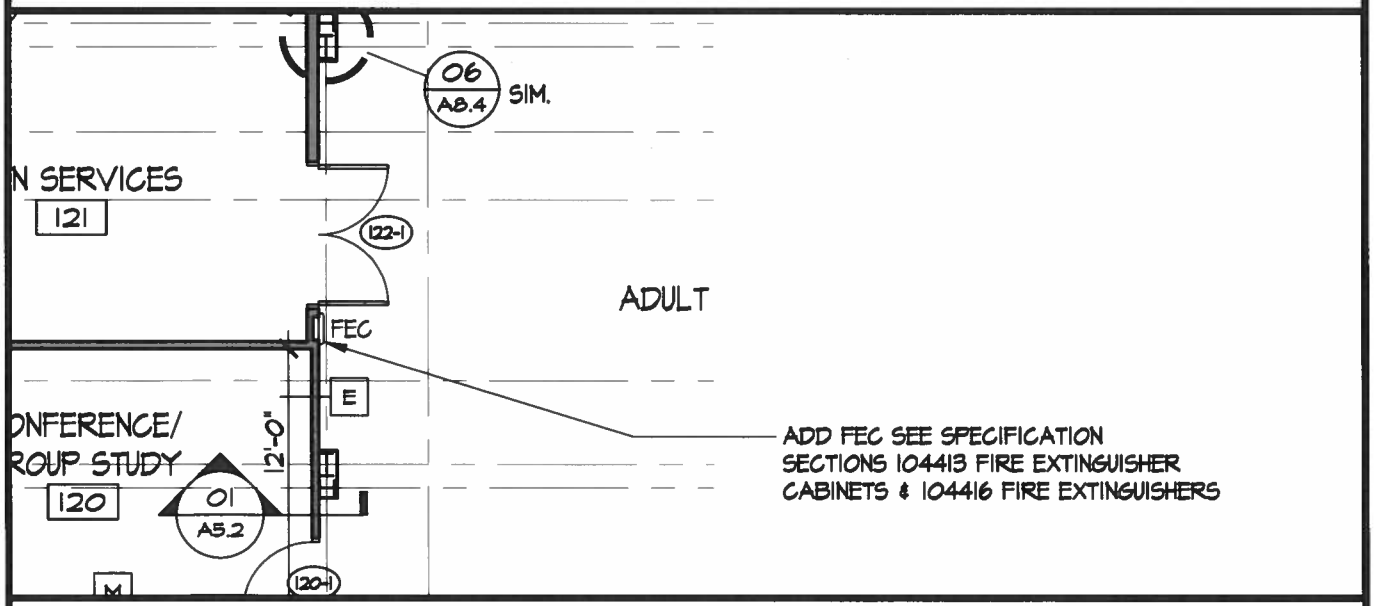

PARTIAL PLAN

1/8"=1'-0"

DAVIS
BOWEN &
FRIEDEL, INC.

ARCHITECTS, ENGINEERS & SURVEYORS

SALISBURY, MARYLAND ■ MILFORD, DELAWARE
410.543.9091 302.424.1441

GREENWOOD PUBLIC LIBRARY
100 MILL STREET
GREENWOOD, DELAWARE

MODIFIES 01/A1 FLOOR PLAN

COPYRIGHT © 2008

Dwg.No.: **CO1.1**

1 OF 5

Date: 11/1/2012 | Scale: NOTED | Proj.No.: 1897B003

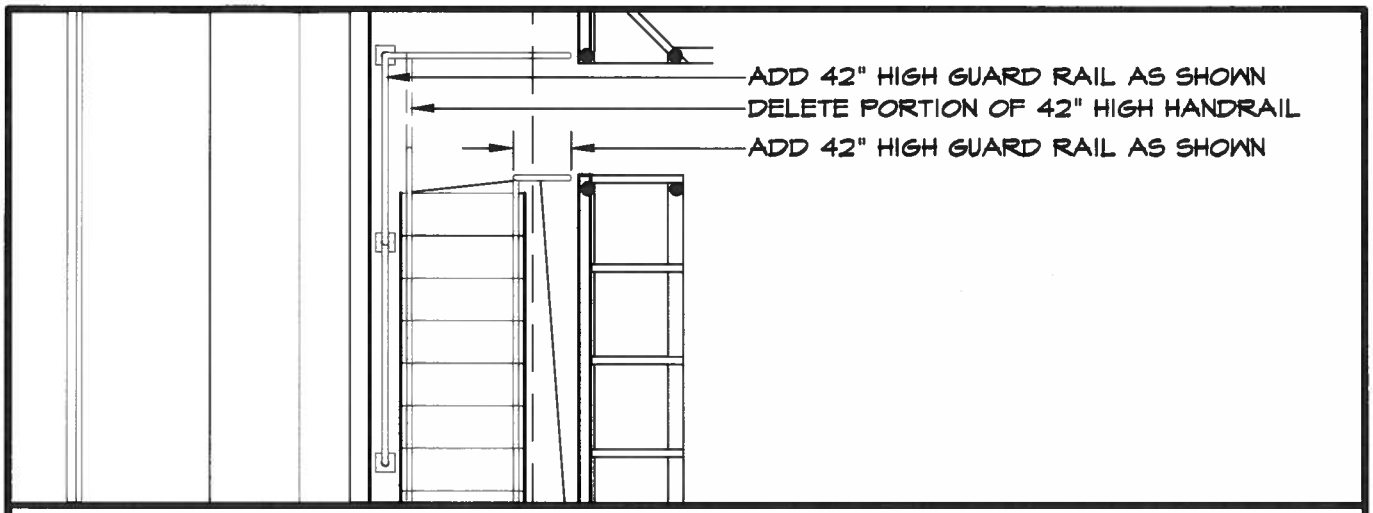

PARTIAL ROOF PLAN

1/4"=1'-0"

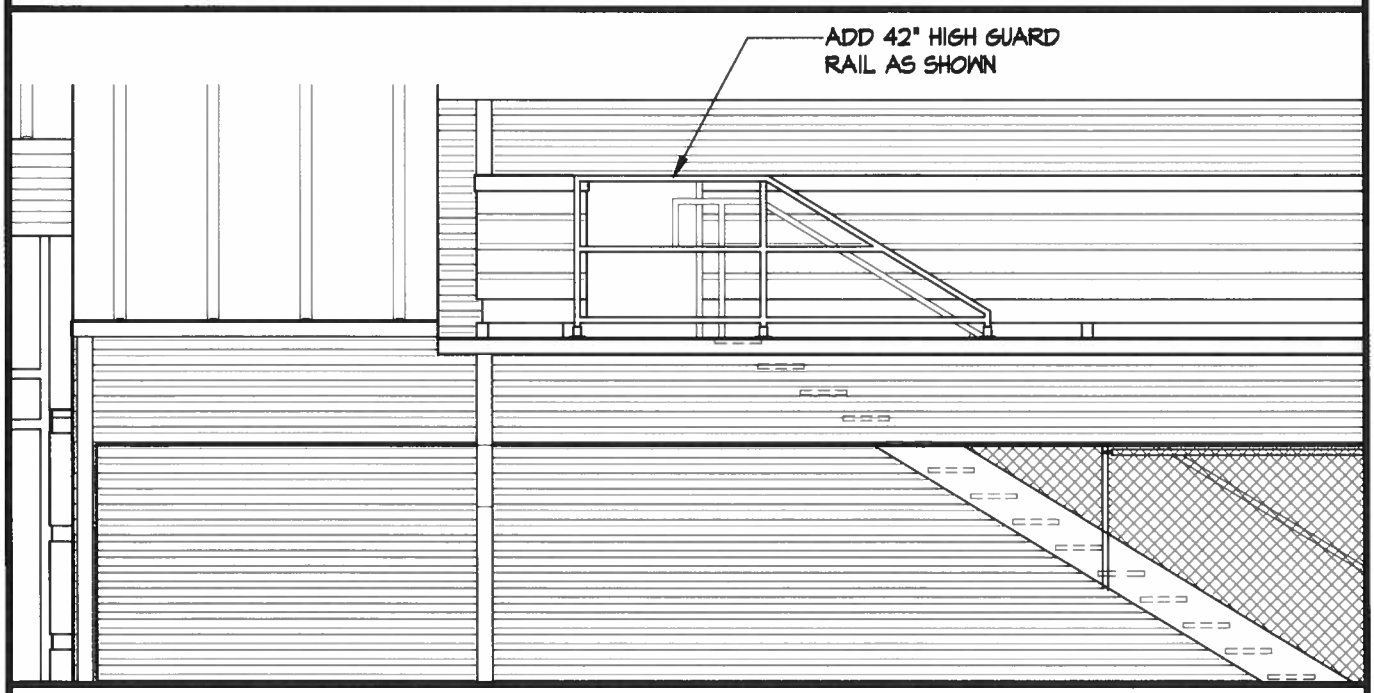

PARTIAL ELEVATION

1/4"=1'-0"

DAVIS
BOWEN &
FRIEDEL, INC.

ARCHITECTS, ENGINEERS & SURVEYORS

SALISBURY, MARYLAND ■ MILFORD, DELAWARE
410.543.9091 302.424.1441

GREENWOOD PUBLIC LIBRARY
100 MILL STREET
GREENWOOD, DELAWARE

MODIFIES 01/A2 ROOF PLAN
& K1/A3 SOUTH ELEVATION

COPYRIGHT © 2008

Dwg.No.: **C01.2**

Date: 11/1/2012 | Scale: NOTED | Proj.No.: 1897B003

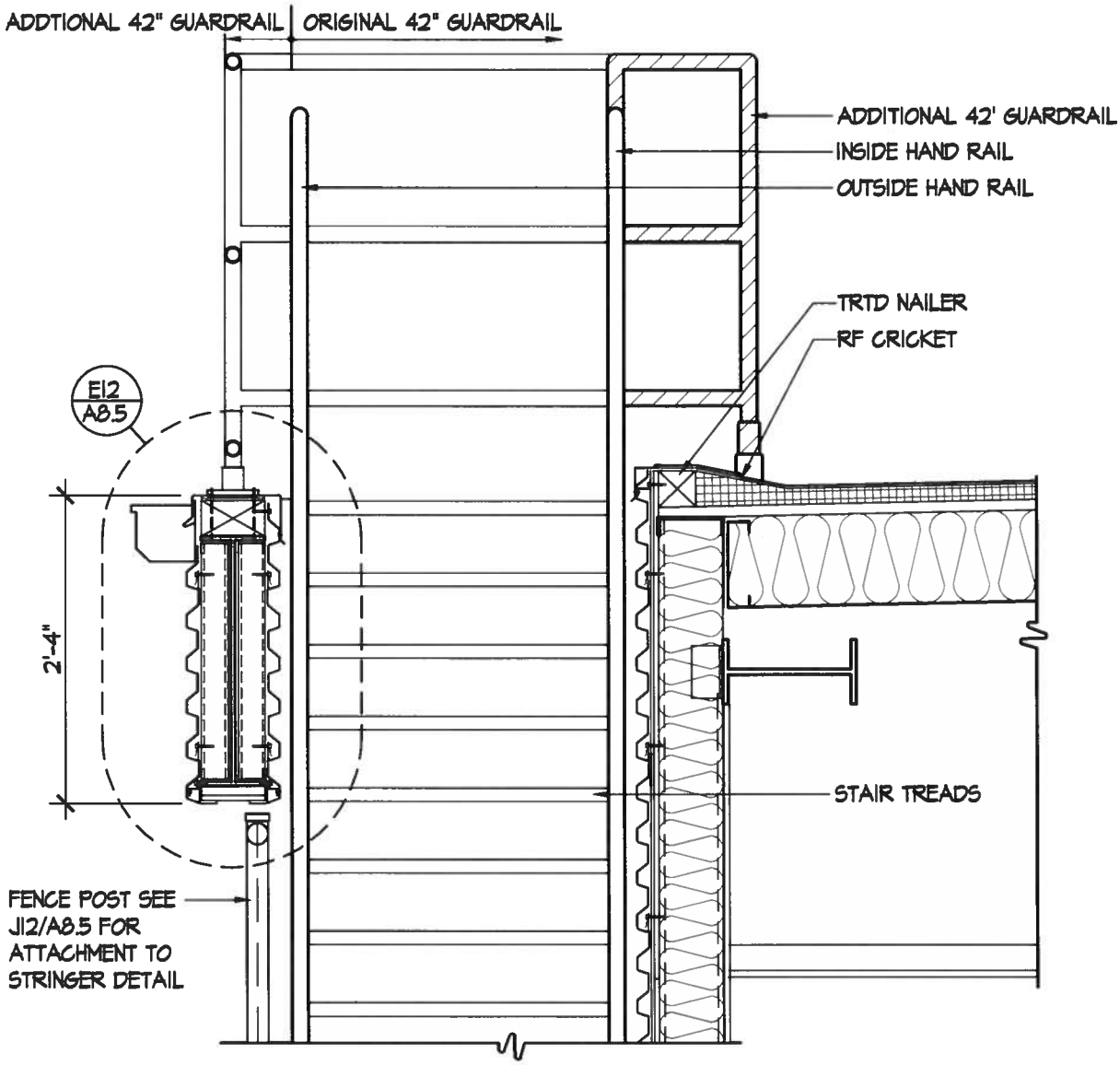

01R STAIR THRU ROOF DETAIL

3/4" = 1'-0"

DAVIS BOWEN & FRIEDEL, INC.

ARCHITECTS, ENGINEERS & SURVEYORS

SALISBURY, MARYLAND ■ MILFORD, DELAWARE
410.543.9091 302.424.1441

GREENWOOD PUBLIC LIBRARY
100 MILL STREET
GREENWOOD, DELAWARE

MODIFIES DET 01/A8.5

COPYRIGHT © 2008

Dwg.No.: C01.3

1 OF 5

Date: 11/1/2012 | Scale: NOTED | Proj.No.: 1897B003

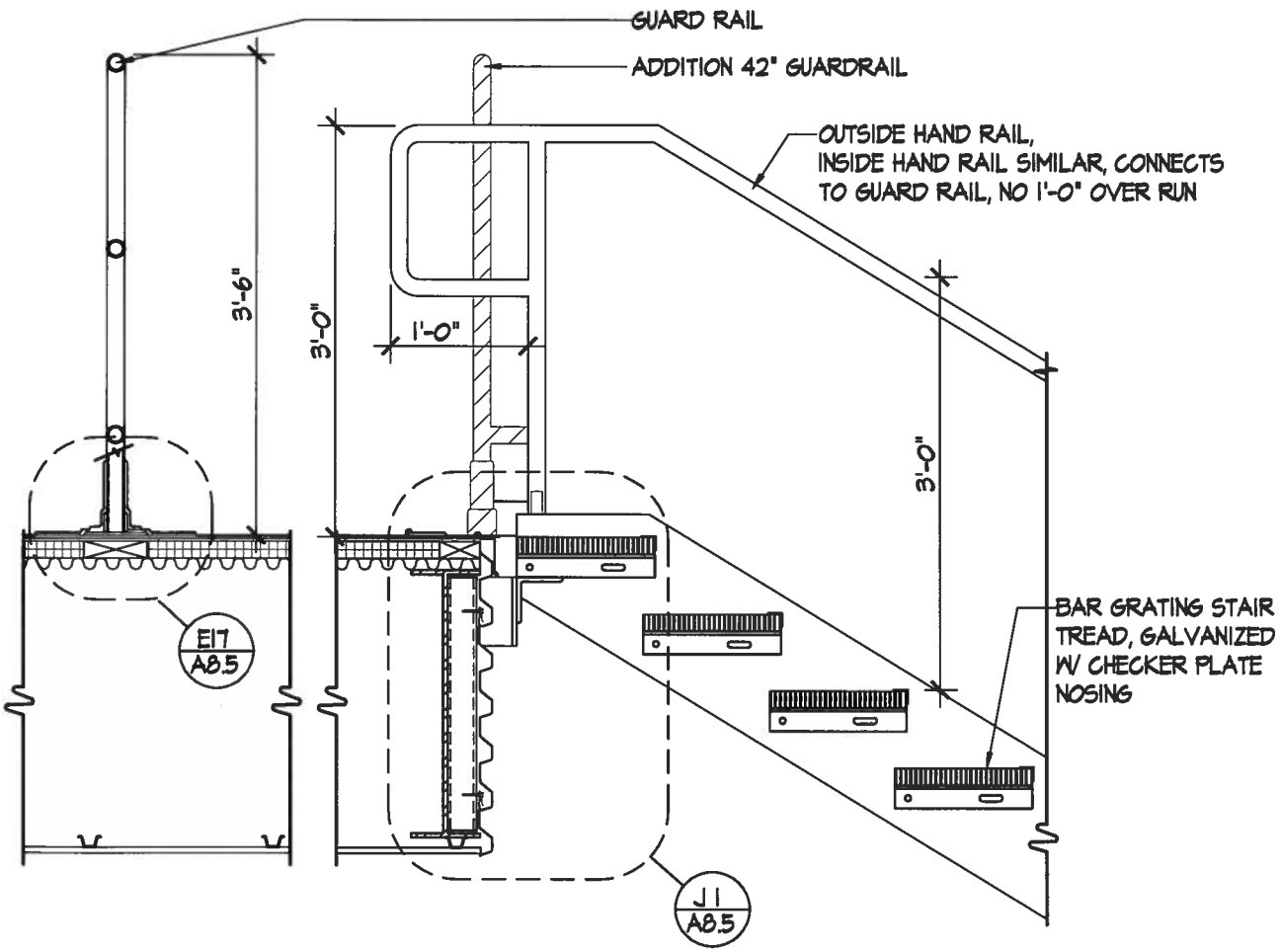

06R STAIR TO ROOF DETAIL

3/4" = 1'-0"

DAVIS BOWEN & FRIEDEL, INC.

ARCHITECTS, ENGINEERS & SURVEYORS

SALISBURY, MARYLAND ■ MILFORD, DELAWARE
410.543.9091 302.424.1441

GREENWOOD PUBLIC LIBRARY
100 MILL STREET
GREENWOOD, DELAWARE

MODIFIES DET 06/A8.5

COPYRIGHT © 2008

Dwg.No.: C01.4

1 OF 5

Date: 11/1/2012 | Scale: NOTED | Proj.No.: 1897B003

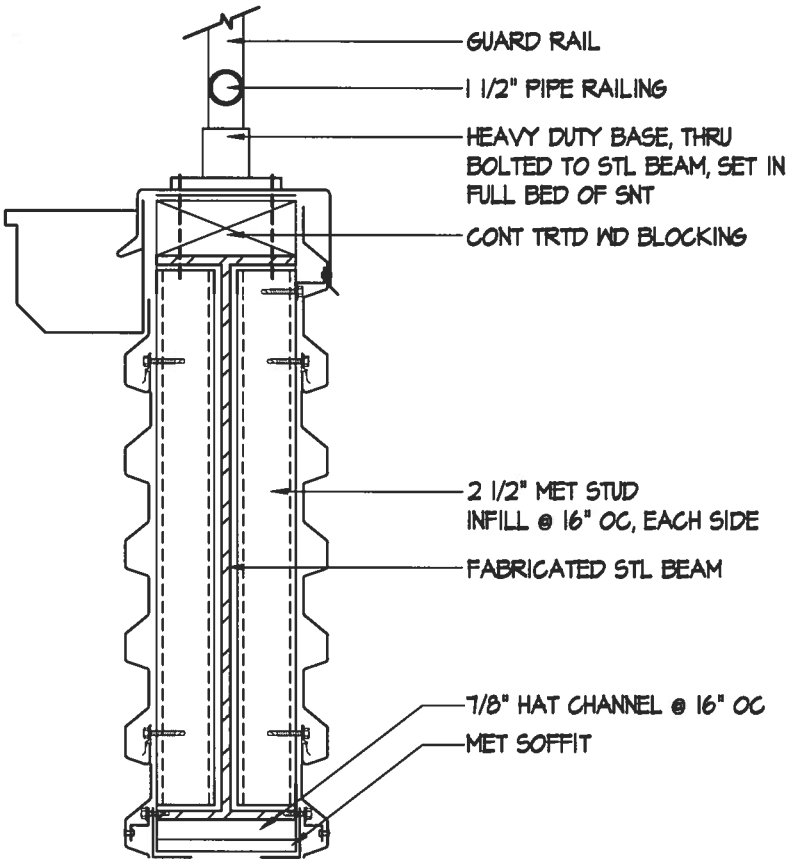

E12R BEAM / FASCIA @ STAIR

1 1/2" = 1'-0"

DAVIS BOWEN & FRIEDEL, INC.
ARCHITECTS, ENGINEERS & SURVEYORS
SALISBURY, MARYLAND ■ MILFORD, DELAWARE
410.543.9091 302.424.1441

GREENWOOD PUBLIC LIBRARY
100 MILL STREET
GREENWOOD, DELAWARE

MODIFIES DET E12/A8.5

COPYRIGHT © 2008

Dwg.No.: CO1.5

1 OF 5

Date: 11/1/2012 | Scale: NOTED | Proj.No.: 1897B003

RICHARD Y. JOHNSON & SON INC.
General Contractor/Construction Mgrs
P.O. Box 105
LINCOLN, DELAWARE 19960
(302) 422-3732
(302)422-4696 fax

Change Order Proposal 4

Job Phone	Date January 3, 2013
Job Location: Greenwood Public Library	
Greenwood, Delaware	
Job Number:	Architect:
DBF # 1897B003	Davis, Bowen & Friedel, Inc.

TO:

Sussex County
2 The Circle
Georgetown, Delaware 19947

We hereby submit specifications and estimates for:

Proposal Based on Rebar Shop Drawing Submittal Revisions	
Additional Concrete and Rebar (Harkins Concrete Quote Attached)	$670.00
Subtotal:	$670.00
RYJ (OH&P) 10%	67.00
Total:	$737.00

For the Sum of: Seven Hundred and Thirty Seven Dollars Dollars & 00 Cents $737.00

All material is guaranteed to be as specified. All work to be completed in a workmanlike manner according to standard industry practices. Any alteration or deviation from the above specifications involving extra cost will be executed only upon written orders, and will become an extra charge over and above the estimate. All agreements contingent upon strikes, accidents or delays beyond our control. Owner to carry fire, tornado and other necessary insurance. Our workers are fully covered by Workman's Compensation Insurance. This proposal may be withdraw by us if not accepted within Thirty (30) days.

Accepted By: _____

Date: _____

Jesse Dixon – Project Manager

HARKINS
CONCRETE
CONSTRUCTION, INC.

31400 WINTERPLACE PARK Ste. 400 SALISBURY, MD 21804 (410) 749-3300

January 3, 2013

Attn: Jessie Dixon
Richard Y Johnson & Son

Ref: Additional Rebar Change Order

From: Mark Malloy

Greenwood Public Library
Greenwood, DE

Jessie, below you will find the breakdown of the additional cost associated with the additional rebar required in the above project. The backup invoice is attached.

Additional Material and Engineering: $400
15% Mark-up: $60
Labor: .3 Tons in place @ 700 per ton: $210

Total Change: $670

Please contact me with any additional questions you may have.

Mark Malloy
Project Estimator

RE-STEEL SUPPLY CO., INC.

REQUEST FOR CHANGE ORDER

CONTR. NAME HARKINS CONCRETE DATE 1-3-13

ADDRESS JOB NAME GREENWOOD PUBLIC

CITY ADDRESS LIBRARY

STATE CONTRS. NO.

OUR JOB NO. 12L-538

DESCRIPTION OF CHANGE (EXACT wording will appear on CHANGE ORDER LETTER)
CHANGE AUTHORIZED BY:

ADD UNCOATED REBARS FOR REVISIONS TO FOUNDATIONS.

MEMO #

ADDITIONAL ENGR. YES SPECIAL TRIP NO

STEEL TYPE L.S. ✓ U.P.

#11	BASE
#10	SIZE
#9	BENDING
#8	QUANTITY
#7	ENGINEERING
#6	SPEC.
#5	FREIGHT
#4	
#3	TOTAL
#2	
TOTAL WT.	0.3 TONS = $400= (INCLUDES ADD'L ENGINEERING)
H. BENDING	
L. BENDING	

CUSTOMER ORDERED: ☐
STOCK OR PURCHASE ORDER

JOB REQUIRED BY ☐
CHANGE ORDER OR ADDN.

Julie Cooper

Subject: FW: CO Backing Docs
Attachments: GPL-033000.07 Concrete Rebar Shop Drawings_Comments.pdf

---

From: Chris CUllen [mailto:clc@dbfinc.com]
Sent: Wednesday, May 29, 2013 1:36 PM
To: Julie Cooper
Subject: RE: CO Backing Docs

Julie,

The changes were made to the foundation when the actual load calculations were completed for the metal building. These calculations are provided by the selected manufacture. I have attached an 11x17 drawings of the changes. If you need something else or a smaller drawing let me know.

Christopher Lee Cullen AIA | Associate | Salisbury Office
One Plaza East, Suite 200 | Salisbury, MD 21801 | www.dbfinc.com
Office: 410-543-9091| Fax: 410-543-4172 | Email: clc@dbfinc.com

DAVIS BOWEN & FRIEDEL, INC.
ARCHITECTS • ENGINEERS • SURVEYORS

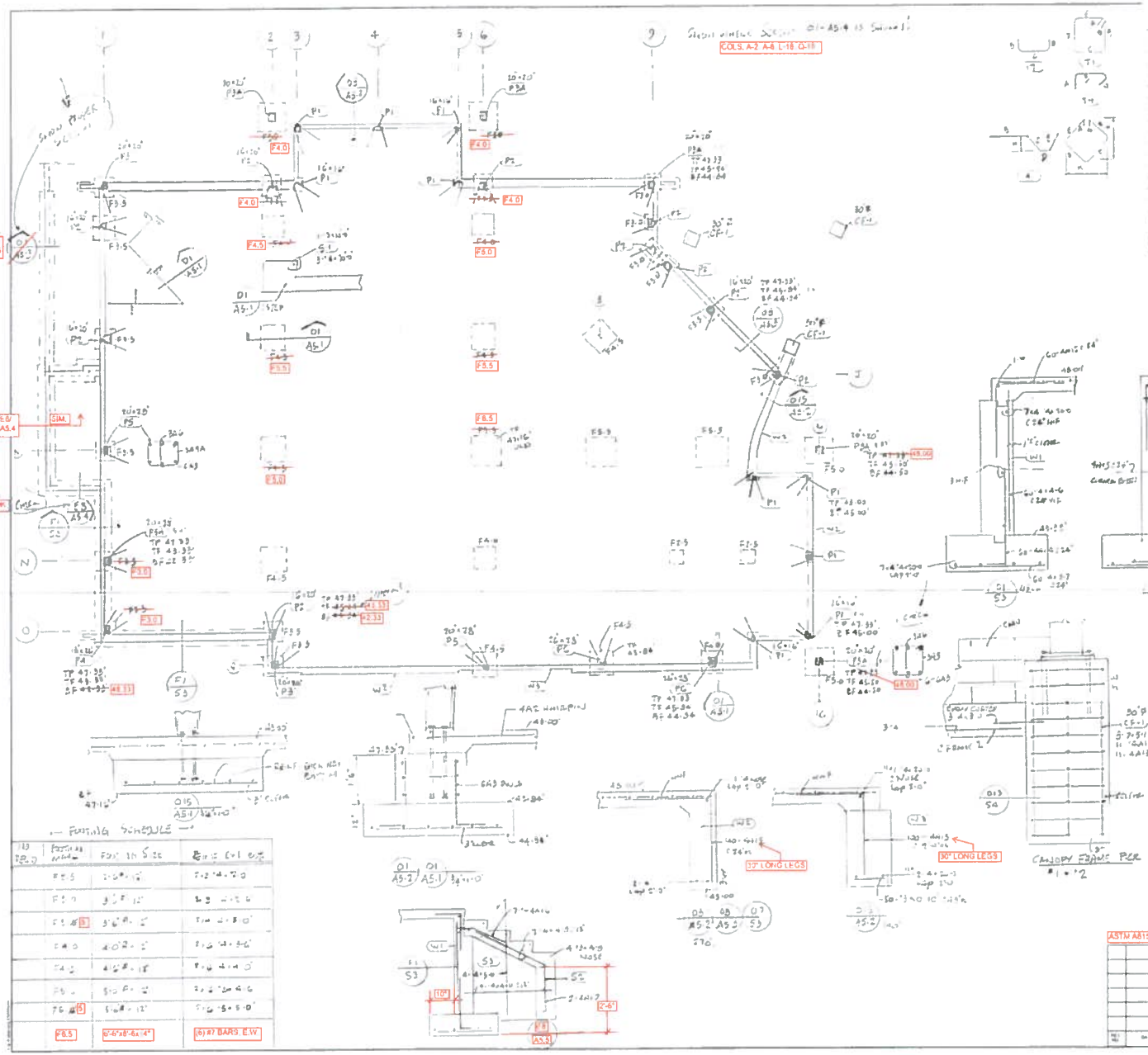

BENDING DETAILS

SIZE	LENGTH	MARK	TYPE	A	B	C	D	E	F/G	G	J	O	M	X
#6	2'-11	6A3	17		1-00	1-11								
#6	9-06	6A7	17		1-00	4-05								
#6	3-03	6A8	17		1-00	2-03								
#4	1-02	4A12	T4	0-04½	1-07½	1-07½	1-07½	1-07½		0-04½			2-02	2-02
#4	8-03	4A13	T1	0-04½	2-02	2-02	2-02	2-02		0-04½				
#4	3-06	4A14	17		0-09	2-09								
#4	4-00	4A15	17		2-00	2-00								
#4	2-09	4A16	3		2-00	0-09						2-09	0-04	0-06
#4	9-00	4A17	3		5-06	2-01½						4-09	1-09	1-05
#4	9-06	4A2	3		4-03	1-00	1-02						4-06	2-00
#3	5-00	3A1	T1	0-04	1-01	1-01	1-01	1-01		0-04				
#3	9-08	3A10	T1	0-04	1-11	2-01	1-11	2-01		0-04				
#3	2-07	3A11	T9	0-04	1-11					0-04				
#3	5-06	3A4	T1	0-04	1-01	1-05	1-01	1-05		0-04				
#3	6-04	3A5	T1	0-04	1-05	1-05	1-05	1-05		0-04				
#3	2-01	3A6	T9	0-04	1-05					0-04				
#3	7-00	3A8	T1	0-04	1-03	1-11	1-03	1-11		0-04				
#3	1-11	3A9	T9	0-04	1-03					0-04				
#3	7-06	3A9A	T1	0-04	1-09	2-01	1-03	2-01		0-04				

FOUNDATIONS

LABEL	MTO	QTY	SIZE	MWLGTH
F2.0	3	6	#4	2-00
F3.0	8	8	#4	2-06
F3.5	11	8	#4	3-00
F4.0	3	12	#4	3-06
F4.5	7	12	#4	4-00
F5.0	4	12	#3	4-06
F5.5	3	12	#3	5-00
P1	18	4	#6	7-00
	18	3	#3	3A1
	19	1	#4	4A2
P2	10	4	#6	6A3
	10	3	#3	3A4
P3	10	1	#4	4A2
	5	8	#6	6A8
	5	3	#3	3A5
	5	3	#3	3A6
P4		8	#6	6A7
		4	#3	3A8
		4	#3	3A9
		1	#4	4A2
P5A	4	8	#6	6A3
	4	3	#3	3A5
	4	3	#3	3A6
P6	2	8	#6	6A3
	2	3	#3	3A8A
P6A	2	1	#4	4A2
		8	#6	6A7
		4	#3	3A8A
		4	#3	3A6
		1	#4	4A7
P9	2	8	#6	6A3
	2	3	#3	3A10
	2	3	#3	3A11
	2	1	#4	4A2
F8.5	3	8	#7	6A1
	3	11	#4	4A12
P1		3	11	#4	4A13
		2	4	#4	2D-03
			63	#4	7-07
			63	#4	4A14
			60	#4	4-06
		2	4	#4	2D-03
			60	#4	4A15
		2	4	#4	4A15
P2	13	3	#4	2D-03
			163	#4	4A15
P3	11	3	#4	2D-03
			50	#3	5-10
			180	#4	4A15
P4		1	#3	1D-03
		3	#3	2D-03
P5		2	#4	4-06
		4	#3	4-06
		6	#4	4A16
		6	#4	4A17
P5A	2	4	#4	3-06
	2	4	#4	4-00

STEEL PLACING DRAWING ONLY USE IN CONJUNCTION WITH CONTRACT DRAWINGS & SPECIFICATIONS ELEVATIONS & DIMENSIONS SHOWN ON THIS DRAWING ARE FOR DETAILING PURPOSES ONLY AND SHOULD NOT BE USED FOR CONSTRUCTION UNLESS VERIFIED BY ENGINEER OR CONTRACTOR

FOR 4000 PSI REINFORCED CONCRETE USE 12T

FOOTING SCHEDULE			
ID	FOOTING SIZE	FOOTING THICKNESS	REINFORCEMENT
F2.5	3'-0"x3'-0"	2'-0"x2'-0"	
F3.0	3'-6"x3'-6"	2'-0"	
F3.5	3'-6"x3'-6"	2'-0"	
F4.0	4'-0"x4'-0"	2'-0"x2'-0"	
F4.5	4'-6"x4'-6"	2'-0"x2'-0"	
F5.0	5'-0"x5'-0"	2'-0"x2'-0"	
F5.5	5'-6"x5'-6"	2'-0"x2'-0"	
F8.5	8'-6"x8'-6"x1'-4"	(6) #7 BARS E.W	

ASTM A615 GR 60 REBAR

REV.	DATE	DESCRIPTION
4		
3		
2		
1	10/31/2012	APPROVAL

RE-STEEL SUPPLY CO INC
PHILADELPHIA PA OFFICE
PHONE (215)427-0190
FAX (215) 427-0199

STRUCTURE: GREENWOOD - 234.4
GREENWOOD TP
LOCATION:
ARCHITECT: DBF INC
ENGINEER: PEDC
CUSTOMER: HARRINGS CONCRETE Co
MADE BY: WT DATE: 01/31/16
DRAWING CHECKED: SHEET 1 of 1
CONTRACT NO. 12L-533
DRAWING NO. HC-R10
FOUNDATIONS

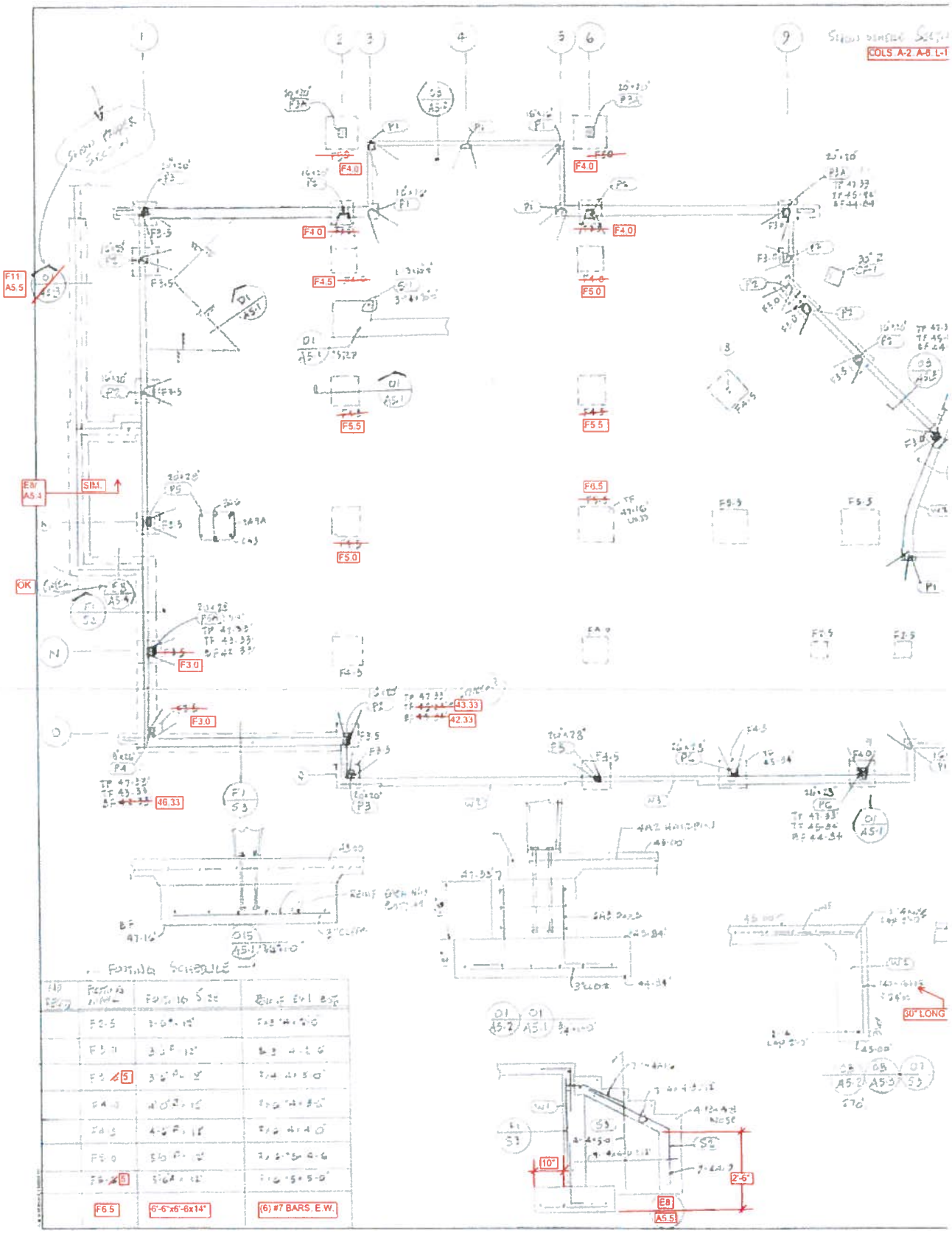

FOOTING SCHEDULE

	F2.5	[illegible]	[illegible]
	F3.0	[illegible]	[illegible]
	F3.5	[illegible]	[illegible]
	F4.0	[illegible]	[illegible]
	F4.5	[illegible]	[illegible]
	F5.0	[illegible]	[illegible]
	F5.5	[illegible]	[illegible]
	F6.5	6'-6"x6'-6x14"	(6) #7 BARS, E.W.

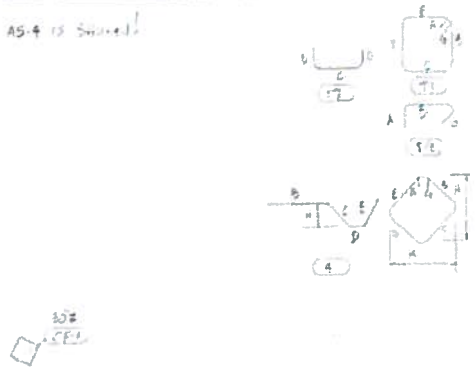

BENDING DETAILS

SIZE	LENGTH	MARK	TYPE	A	B	C	D	E	F/R	G	J	O	H	K
#5	2-11	5A3	T7		1-03	1-11								
#6	5-05	6A1	T7		1-00	4-05								
#5	3-03	5A8	T2		1-00	2-03								
#4	7-02	4A12	T4	0-04½	1-07½	1-07½	1-07½	1-07½		0-04½			2-03	2-00
#4	9-05	4A13	T9	0-04½	2-02	2-02	2-02	2-02		0-04½				
#4	3-05	4A14	T7		0-08	2-08								
#4	4-00	4A15	T7		2-00	2-00								
#4	2-08	4A16	J		2-08	0-08						2-08	0-04	0-08
#4	3-08	4A17	J		3-08	2-01½						4-09	1-09	1-03
#4	8-05	4A2	J		4-03	1-03	4-02						4-00	2-00
#3	5-00	3A1	T1	0-04	1-01	1-01	1-01	1-01		0-04				
#3	5-08	3A10	T8	0-04	1-11	3-01	1-11	2-01		0-04				
#3	2-07	3A11	T9	0-04	1-11					0-04				
#3	5-06	3A4	T1	0-04	1-01	1-05	1-01	1-05		0-04				
#3	5-04	3A5	T1	0-04	1-03	1-05	1-03	1-05		0-04				
#3	2-04	3A6	T8	0-04	1-05					0-04				
#3	7-03	3A8	T1	0-04	1-02	1-11	1-03	1-11		0-04				
#3	1-11	3A9	T9	0-04	1-03					0-04				
#3	2-09	3A24	T1	0-04	1-05	2-01	1-05	2-01		0-04				

FOUNDATIONS

LABEL	REQ	QTY	SIZE	MK/LGTH
F2.5	2	6	#4	2-00
F3.0	6	6	#4	2-05
F3.5	11	8	#4	3-00
F4.0	9	12	#4	3-05
F4.5	7	12	#4	4-00
F5.0	4	12	#4	4-05
F5.5	3	12	#4	5-00
P1	10	4	#5	2-00
	10	2	#3	3A1
	10	1	#4	4A2
P2	10	4	#5	6A3
	13	3	#3	3A1
	10	1	#4	4A2
P3	5	5	#6	6A8
	5	3	#3	3A5
	5	2	#3	3A6
P4		5	#3	6A7
		4	#3	3A8
		4	#3	3A9
		1	#4	4A2
P3A	4	6	#5	6A7
	4	1	#3	3A5
	4	5	#3	3A4
P5	2	6	#6	6A3
	2	3	#3	3A3A
	2	1	#4	4A2
P5A		6	#5	6A7
		4	#3	3A3A
		4	#3	3A8
		1	#4	4A2
P6	2	6	#6	6A3
	2	3	#3	3A10
	2	3	#3	3A11
	2	1	#4	4A2
CF-1	3	3	#7	5-01
	3	11	#4	4A12

	3	11	#4	4A13
W1	2	4	#4	20-00
		60	#4	2-07
		60	#4	4A14
		60	#4	4-08
	1	4	#4	20-00
	1	40	#4	4A15
	1	4	#4	4A15
W2	15	2	#4	20-00
		140	#4	4A15
W3	11	3	#4	20-00
		33	#3	5-10
		100	#4	4A15
S1		1	#3	15-00
		3	#3	20-00
S2		1	#4	4-08
		4	#3	4-08
		8	#4	4A16
		8	#4	4A17
S3	2	4	#4	5-00
	2	4	#4	4-00

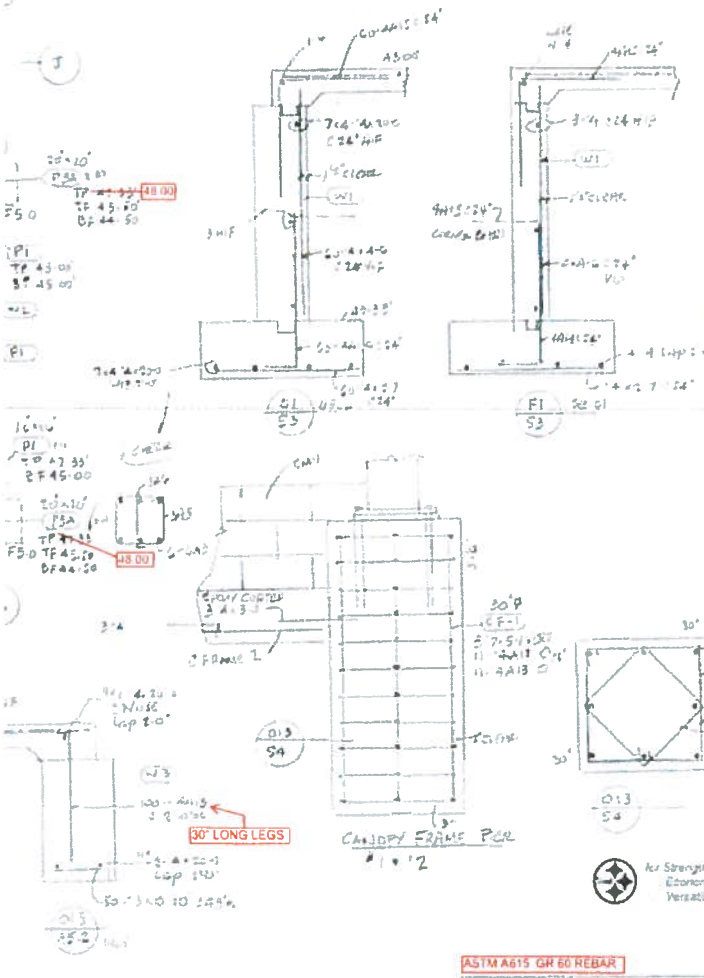

STEEL PLACING DRAWING ONLY. USE IN CONJUNCTION WITH CONTRACT DRAWINGS & SPECIFICATIONS. ELEVATIONS & DIMENSIONS SHOWN ON THIS DRAWING ARE FOR DETAILING PURPOSES ONLY AND SHOULD NOT BE USED FOR CONSTRUCTION UNLESS VERIFIED BY ENGINEER OR CONTRACTOR.

PENNSYLVANIA HASKINS CONCRETE CO. DETAIL

4		
3		
2		
1	10/13/2011	APPROVED
	DATE	SENT FOR

RE-STEEL SUPPLY CO., INC
PHILADELPHIA, PA. OFFICE
PHONE (215)427-0199
FAX (215) 427-0199

ASTM A615 GR 60 REBAR

STRUCTURE	GREENWOOD LIBRARY
	GREENWOOD PA
LOCATION	
ARCHITECT	DBF INC
ENGINEER	REDC
CUSTOMER	HASKINS CONCRETE CO
DRAWN BY	DATE 6/11/10
DRAWING CONTENTS	SHEET 1 of 1
	FOUNDATIONS
CONTRACT NO	12L-533
DRAWING NO	HC-R10

REV	DATE	DESCRIPTION

RICHARD Y. JOHNSON & SON INC.
General Contractor/Construction Mgrs
P.O. Box 105
LINCOLN, DELAWARE 19960
(302) 422-3732
(302)422-4696 fax

Change Order Proposal 6

Job Phone	Date February 5, 2013
Job Location: Greenwood Public Library	
Greenwood, Delaware	
Job Number:	Architect:
DBF # 1897B003	Davis, Bowen & Friedel, Inc.

TO:

Sussex County
2 The Circle
Georgetown, Delaware 19947

We hereby submit specifications and estimates for:

Time Extension = 3 Days based on NOAA Report for Adverse Weather.
Contract anticipated adverse weather days per NOAA for January: 5
Actual adverse weather days per NOAA for January: 8 (Based on Georgetown Airport – See attached)

Previous Substantial Completion Date: October 29, 2013
Updates Substantial Completion Date: November 1, 2013

Days Requested = Jan. 15, 16, 17, 2013

For the Sum of: Zero Dollars $0.00

All material is guaranteed to be as specified. All work to be completed in a workmanlike manner according to standard industry practices. Any alteration or deviation from the above specifications involving extra cost will be executed only upon written orders, and will become an extra charge over and above the estimate. All agreements contingent upon strikes, accidents or delays beyond our control. Owner to carry fire, tornado and other necessary insurance. Our workers are fully covered by Workman's Compensation Insurance. This proposal may be withdraw by us if not accepted within Thirty (30) days.

Accepted By: _____

Date: _____ Jesse Dixon – Project Manager

PRELIMINARY LOCAL CLIMATOLOGICAL DATA (WS FORM: F-6)

STATION: GEORGETOWN DE
MONTH: JANUARY
YEAR: 2013
LATITUDE: 38 41 N
LONGITUDE: 75 22 W

TEMPERATURE IN F:							:PCPN:	SNOW:	WIND		:SUNSHINE:	SKY	:PK WND			
1	2	3	4	5	6A	6B	7	8	9	10	11	12	13	14	15	16	17	18
												12Z	AVG MX 2MIN					
DY	MAX	MIN	AVG	DEP	HDD	CDD	WTR	SNW	DPTH	SPD	SPD	DIR	MIN	PSBL	S-S	WX	SPD	DR
1	46	40	43	7	22	0	0.00	M	M	2.8	9	300	M	M	5		14	280
2	40	26	33	-3	32	0	0.00	M	M	4.1	12	320	M	M	4		17	360
3	36	26	31	-5	34	0	0.00	M	M	3.4	10	280	M	M	0		15	280
4	43	23	33	-2	32	0	0.00	M	M	6.1	16	280	M	M	0	18	24	280
5	45	29	37	2	28	0	0.00	M	M	4.4	14	330	M	M	0		28	280
6	52	35	44	9	21	0	T	M	M	3.3	12	170	M	M	5		14	180
7	51	29	40	5	25	0	0.00	M	M	3.1	13	360	M	M	3		66	210
8	56	26	41	6	24	0	0.00	M	M	3.5	16	220	M	M	4	18	21	240
9	63	35	49	14	16	0	0.00	M	M	4.9	17	220	M	M	3	1	23	220
10	55	35	45	10	20	0	0.00	M	M	3.2	15	280	M	M	0		20	290
11	56	33	45	10	20	0	0.10	M	M	3.9	14	210	M	M	6	18	22	110
12	59	42	51	16	14	0	0.00	M	M	2.5	12	260	M	M	7	128	18	260
13	58	40	49	14	16	0	0.00	M	M	6.3	13	160	M	M	10	12	15	160
14	64	46	55	20	10	0	0.18	M	M	7.3	16	220	M	M	7	1	23	20
15	46	38	42	7	23	0	0.52	M	M	7.8	14	40	M	M	10	1	26	40
16	45	37	41	6	24	0	0.77	M	M	5.1	14	310	M	M	10	1	22	310
17	44	34	39	4	26	0	0.53	M	M	1.2	9	340	M	M	9	18	20	30
18	39	26	33	-2	32	0	0.06	M	M	4.5	15	340	M	M	3	18	23	10
19	52	27	40	5	25	0	0.00	M	M	12.0	23	230	M	M	0		32	240
20	59	38	49	14	16	0	0.00	M	M	10.2	20	230	M	M	0		28	250
21	44	25	35	0	30	0	T	M	M	5.5	16	340	M	M	2	1	28	330
22	31	18	25	-10	40	0	0.00	M	M	9.1	22	280	M	M	0		36	280
23	26	13	20	-15	45	0	0.00	M	M	4.5	18	280	M	M	3		30	290
24	27	17	22	-13	43	0	0.09	M	M	7.7	18	300	M	M	4	1	32	290
25	25	14	20	-15	45	0	0.05	M	M	1.7	10	170	M	M	5	18	14	170
26	32	8	20	-15	45	0	0.00	M	M	4.6	16	330	M	M	4	128	24	290
27	36	16	26	-9	39	0	0.00	M	M	2.8	12	280	M	M	0	8	15	280
28	48	23	36	1	29	0	T	M	M	8.1	20	220	M	M	8	168	25	220
29	67	40	54	19	11	0	0.00	M	M	6.0	10	120	M	M	2	18	15	120

30 75 50 63 28 2 0 0.00 M M 16.2 36 190 M M 4 18 49 190
31 67 32 50 15 15 0 0.50 M M 15.0 37 200 M M 5 1 56 180
==========
SM 1487 921 804 0 2.80 M 180.8 M 123
==========
AV 48.0 29.7 5.8 FASTST M M 4 MAX(MPH)
MISC ----> # 37 200 # 66 210
==========
NOTES:
LAST OF SEVERAL OCCURRENCES

COLUMN 17 PEAK WIND IN M.P.H.

PRELIMINARY LOCAL CLIMATOLOGICAL DATA (WS FORM: F-6) , PAGE 2

STATION: GEORGETOWN DE
MONTH: JANUARY
YEAR: 2013
LATITUDE: 38 41 N
LONGITUDE: 75 22 W

[TEMPERATURE DATA] [PRECIPITATION DATA] SYMBOLS USED IN COLUMN 16

AVERAGE MONTHLY: 38.8 TOTAL FOR MONTH: 2.80 1 = FOG OR MIST
DPTR FM NORMAL: 3.8 DPTR FM NORMAL: -0.12 2 = FOG REDUCING VISIBILITY
HIGHEST: 75 ON 30 GRTST 24HR 0.77 ON 16-16 TO 1/4 MILE OR LESS
LOWEST: 8 ON 26 3 = THUNDER
SNOW, ICE PELLETS, HAIL 4 = ICE PELLETS
TOTAL MONTH: M 5 = HAIL
GRTST 24HR M ON M 6 = FREEZING RAIN OR DRIZZLE
GRTST DEPTH: M ON M 7 = DUSTSTORM OR SANDSTORM:
VSBY 1/2 MILE OR LESS
8 = SMOKE OR HAZE
[NO. OF DAYS WITH] [WEATHER - DAYS WITH] 9 = BLOWING SNOW
X = TORNADO
MAX 32 OR BELOW: 5 0.01 INCH OR MORE: 9
MAX 90 OR ABOVE: 0 0.10 INCH OR MORE: 6
MIN 32 OR BELOW: 17 0.50 INCH OR MORE: 4
MIN 0 OR BELOW: 0 1.00 INCH OR MORE: 0

[HDD (BASE 65)]
TOTAL THIS MO. 804 CLEAR (SCALE 0-3) 12
DPTR FM NORMAL -124 PTCLDY (SCALE 4-7) 15
TOTAL FM JUL 1 2218 CLOUDY (SCALE 8-10) 4
DPTR FM NORMAL -292

[CDD (BASE 65)]
TOTAL THIS MO. 0
DPTR FM NORMAL 0 [PRESSURE DATA]
TOTAL FM JAN 1 0 HIGHEST SLP 30.54 ON 27
DPTR FM NORMAL 0 LOWEST SLP 29.05 ON 31

[REMARKS]
#FINAL-01-13#

Julie Cooper

From: Jesse Dixon <jdixon@ryjson.com>
Sent: Thursday, February 07, 2013 9:16 AM
To: Julie Cooper
Subject: Change Order No. 6 Adverse Weather Days

Julie,

The Adverse Weather Days we are requesting are January 15th, 16th & 17th

Thanks

Jesse Dixon

Richard Y Johnson & Son
18404 Johnson Rd
Lincoln, DE 19960
302.422.3732
302.422.4696
www.ryjson.com

RICHARD Y. JOHNSON & SON INC.
General Contractor/Construction Mgrs
P.O. Box 105
LINCOLN, DELAWARE 19960
(302) 422-3732
(302)422-4696 fax

Change Order Proposal 7

Job Phone	Date May 29, 2013
Job Location: Greenwood Public Library	
Greenwood, Delaware	
Job Number:	Architect:
DBF # 1897B003	Davis, Bowen & Friedel, Inc.

TO:

Sussex County
2 The Circle
Georgetown, Delaware 19947

We hereby submit specifications and estimates for:

Change Order Request for deleting napkin dispensers & hollow metal windows at Room	
106 and adding trim to countertops	
Window Deduct – (Superior Engineered Products quote attached)	$-1,340.00
Glazing Deduct – (Peninsula Glass quote attached)	$-320.00
Napkin Dispenser Deduct (A&F Quote attached)	$-125.00
Drywall Add- (Peninsula Acoustical Quote attached)	$588.43
HM Frame Add – (Superior Engineered Products)	$175.00
Bull nose Add (Cabinetry Unlimited)	$583.20
Total:	$-438.37

For the Sum of: Deduct Four Hundred and Thirty-Eight Dollars & 37 Cents $-438.37

All material is guaranteed to be as specified. All work to be completed in a workmanlike manner according to standard industry practices. Any alteration or deviation from the above specifications involving extra cost will be executed only upon written orders, and will become an extra charge over and above the estimate. All agreements contingent upon strikes, accidents or delays beyond our control. Owner to carry fire, tornado and other necessary insurance. Our workers are fully covered by Workman's Compensation Insurance. This proposal may be withdraw by us if not accepted within Thirty (30) days.

Accepted By: _____

Date: _____

Jesse Dixon – Project Manager

Jesse Dixon

From: ron@superior-e.com
Sent: Friday, March 15, 2013 11:20 AM
To: Jesse Dixon
Subject: RE: Wood Door and Frame Submittal

Jesse,

As we discussed frames 10, 11, and 12 along with single HM frame for 106 is $2,075.

3,240	10-14
-1,340	-13-14
+ 175	+106
$2,075	

I hope this is helpful.

Thanks,
Ron

-----Original Message-----
From: Jesse Dixon [mailto:jdixon@ryjson.com]
Sent: Friday, March 15, 2013 10:24 AM
To: ron@superior-e.com
Subject: RE: Wood Door and Frame Submittal

Ron, as discussed, please provide a revised change order amount for Frames 10, 11 & 12 and a deduct for 13, 14, and a separate cost for a Hollow metal frame for door 106, so I can show it as a add against the deduct for 13 and 14

Thanks

From: ron@superior-e.com [mailto:ron@superior-e.com]
Sent: Friday, March 15, 2013 10:10 AM
To: Jesse Dixon
Subject: RE: Wood Door and Frame Submittal

Good morning Jesse,

I have attached the frame drawings for 10-14. All frames to be knockdown, 4 3/4" throat, 5 3/4" overall with loose glass stop for 1/4" glass (supplied and installed by others). I also have the revised folding partition drawing with dimensions. Let me know if you need anything else. Do you have a tentative schedule for this project?

Thank you,
Ron

-----Original Message-----
From: Jesse Dixon [mailto:jdixon@ryjson.com]
Sent: Thursday, March 14, 2013 11:04 AM
To: ron@superior-e.com
Subject: RE: Wood Door and Frame Submittal

Ron, please proceed with the additional information interior metal window/door frames, please send submittals ASAP, I will forward a change order for the amount stated below ASAP

Thanks

From: ron@superior-e.com [mailto:ron@superior-e.com]
Sent: Tuesday, March 12, 2013 10:40 AM
To: Jesse Dixon
Subject: RE: Wood Door and Frame Submittal

Good morning Jesse,

The samples are going out today, and the lite kits will be a flush wood bead to match the veneer of the doors. Glass supplied and installed by others.

Interior hollow metal doors that were on the door schedule were submitted (22), Frame style 1 and 2.
Interior metal window/door frames at tutoring 105 (frame style 10-14) are not included.
I have contacted suppliers and the cost to supply them is $3,240.

Thanks,
Ron

> -----Original Message-----
> **From:** Jesse Dixon [mailto:jdixon@ryjson.com]
> **Sent:** Sunday, March 10, 2013 12:48 PM
> **To:** ron@superior-e.com
> **Subject:** FW: Wood Door and Frame Submittal
>
> Ron, please see below questions from architect regarding interior wood doors and hollow metal, can you send samples, please advise
>
> Thanks
>
> ---
>
> **From:** Chris Cullen [mailto:clc@dbfinc.com]
> **Sent:** Thursday, March 07, 2013 9:20 AM
> **To:** Jesse Dixon
> **Subject:** Wood Door and Frame Submittal
>
> Jesse,
>
> Are you shipping the samples for the interior wood door finish selection? The door product data did not include details on the glass lite installation for the narrow vision and half glass doors. I cannot finish my review until these items are submitted.
>
> The interior hollow metal window / door frames at the Tutoring 105 were not submitted with the door frames, will they be part of a different submittal?
>
> **Christopher Lee Cullen AIA | Associate | Salisbury Office**
> One Plaza East, Suite 200 | Salisbury, MD 21801 | www.dbfinc.com
> Office: 410-543-9091| Fax: 410-543-4172 | Email: clc@dbfinc.com
> DAVIS BOWEN & FRIEDEL, INC.
> ARCHITECTS • ENGINEERS • SURVEYORS

A & F PRODUCTS, INC.

Flag Poles • Toilet Partitions • Bathroom Accessories
Fire Extinguishers & Cabinets

26869 BLUE HERON WAY • LONGNECK, DE 19966

(302) 947-4490

Fax (302) 947-4449

FAX TRANSMISSION SHEET

April 3,2013
DATE

TO: Richard Y. Johnson & Son Inc. ATTN. Jesse Dixon

FROM:

A & F PRODUCTS

RE: Greenwood Public Library

1. Change Order Proposal to Delete Sanitary/Napkin Dispensers
2. Credit of $ 125.00
3.
4.
5.
6.
7.
8.
9.
10. David W. French

E-MAIL
Dwfrenchy@verizon.net

David W French
Signature

Change Order 1 – Fixed Contract Amount

This Agreement, Made as of April 2, In the Year of 2013,

Between the Owner: **JOHNSON, RICHARD Y. & SON, INC.**
LINCOLN, DE 19960
422-3732

And the Contractor: **Peninsula Acoustical Company, Incorporated**
441 Pier Head Blvd.
Smyrna, Delaware 19977

302/653-3551

For the Change Order: **Change Order 1**

For the Project: **GREENWOOD PUBLIC LIBRARY**

The Owner authorizes the Contractor to make the following changes to the above project:

Description: INFILL WHERE WINDOW UNIT IS BEING DELETED AT ROOM 106

Name	Resource	Estimate	Sales Tax	Markup	Total	Actual	Classification
Division 09 - Finishes							
09100 Metal Stud Assemblies							
8" 20ga. x 12'-0" Stud		$106.80		$16.02	$122.82		Material
8" 20ga. x 10'-0" Track		$17.80		$2.67	$20.47		Material
09100 Metal Stud Assemblies-Labor							
Labor- LGMF		$101.96		$15.29	$117.25		Labor
09250 Gypsum Board Assemblies							
5/8" Type X, 4 x 12		$67.20		$10.08	$77.28		Material
Joint Compound		$14.00		$2.10	$16.10		Material

09250 Gypsum Board Assemblies-Labor							
Labor- Finish Drywall		$101.96		$15.29	$117.25		Labor
Labor- Hang Drywall		$101.96		$15.29	$117.25		Labor
TOTALS		**$511.68**	**$0.00**	**$76.75**	**$588.43**	**$0.00**	

ATTACHMENTS:

The following is based on information provided by the contractor.

Contract Sum

Original Contract Amount	$169,138.00
Revised Contract Amount Prior to this Change Order	$169,138.00
Cost for this Change Order	$588.43
The New Contract Total including this Change Order	$169,726.43

ACCEPTANCE

This agreement is not valid until signed by Owner and Contractor.

Signature indicates agreement herewith, including any adjustment in the Contract Total and Contract Time.

_____ _____

Owner Dated

_____ _____

Contractor Dated

Change Order

CABINETRY UNLIMITED LLC
#7 HOOSIER ST, P.O. BOX 687
SELBYVILLE, DE. 19975
(302) 436-8696

	DATE 03/18/2013	S/O #
	JOB NAME GREENWOOD PUBLIC LIBRARY	
	JOB LOCATION GREENWOOD DE	
PHONE / -	DATE OF PLANS 09/06/2012	JOB PHONE

The following item/items have been; changed, ammended, deleted, added or selected:

PER ATTACHED CABINETRY UNLIMITED DRAWINGS, TO SUPPLY & INSTALL BULLNOSE WOOD TRIM TO PATRON SIDE OF SOLID-SURFACE COUNTER @ CIRCULATION DESK RM 123, TO EDGE OF SOLID-SURFACE WORK COUNTER @ COLUMN IN RM 122 and OUTSIDE EDGE OF LAMINATE WORK COUNTER @ RM 122.

ROOM NAME	COUNTER TYPE PER PROPOSAL	ADD BULLNOSE WOOD TRIM
CIRCULATION DESK @ RM #123	SOLID-SURFACE	$607.50
COLUMN COUNTER @ RM #122	SOLID-SURFACE	$364.50
WORK COUNTER @ RM #122	SELFEDGE LAMINATE COUNTERS	$583.20

see K Graybeal email of 4/2/2013 for laptop counter only

TOTAL CHANGES
ADD TO CONTRACT $1,555.20

ANY APPICABLE FEDERAL, STATE OR LOCAL TAXES WILL BE ADDED. ANY CHANGES MADE AFTER THE EXECUTION OF THIS AGREEMENT WILL BE DONE AT THE EXPENSE OF THE CUSTOMER.

We Propose hereby to furnish material and/or labor - In accordance with the above specifications, for the sum of :

One thousand five hundred fifty five .20/100---------- DOLLARS ($ 1,555.20).

Payment to be made as follows:

2% DISCOUNT TEN DAYS FROM THE DATE OF INVOICE,NET 30 DAYS. 2% FINANCE CHARGE PER MONTH FOR AMOUNTS OVER 30 DAYS. PURCHASER IS RESPONSIBLE FOR ALL COST OF COLLECTION OF PAST DUE AMOUNT INCLUDING ATTORNEY FEE OF UP TO 33% OF AMOUNT DUE.

ALL MATERIAL IS GUARANTEED TO BE AS SPECIFIED. ALL WORK TO BE DONE IN A WORKMAN LIKE MANNER ACCORDING TO STANDARD PRACTICES. ANY ALTERATION OR DEVIATION FROM ABOVE SPECIFICATIONS INVOLVING EXTRA COST WILL BE EXECUTED ONLY UPON WRITTEN ORDERS, AND WILL BECOME AN EXTRA CHARGE OVER AND ABOVE THE ESTIMATE. ALL AGREEMENTS CONTINGENT UPON STRIKES, ACCIDENTS ORDELAYS BEYOND OUR CONTROL. OWNER TO CARRY FIRE, TORNADO AND OTHER NESSARY INSURANCE. OUR WORKERS ARE FULLY COVERED BY WORKMEN COMPENSATION INSURANCE.

AUTHORIZED SIGNATURE _____
Dieter Baier

Acceptance of Change Order -The above prices and changes are satisfactory and are hereby accepted. You are authorized to do the work as specified. Payment will be made as outlined above.

SIGNATURE:

DATE OF ACCEPTANCE:

SIGNATURE:

CUSTOM-BUILT OAK PLY-WOOD CASEWORK and KNEEWALL
MEGANITE GROUP-2 SOLID-SURFACE COUNTER w/ FULL ROUND EDGE
[re) DBF DRAWING AA, A8.2, A8.3, A8.4, A8.5]

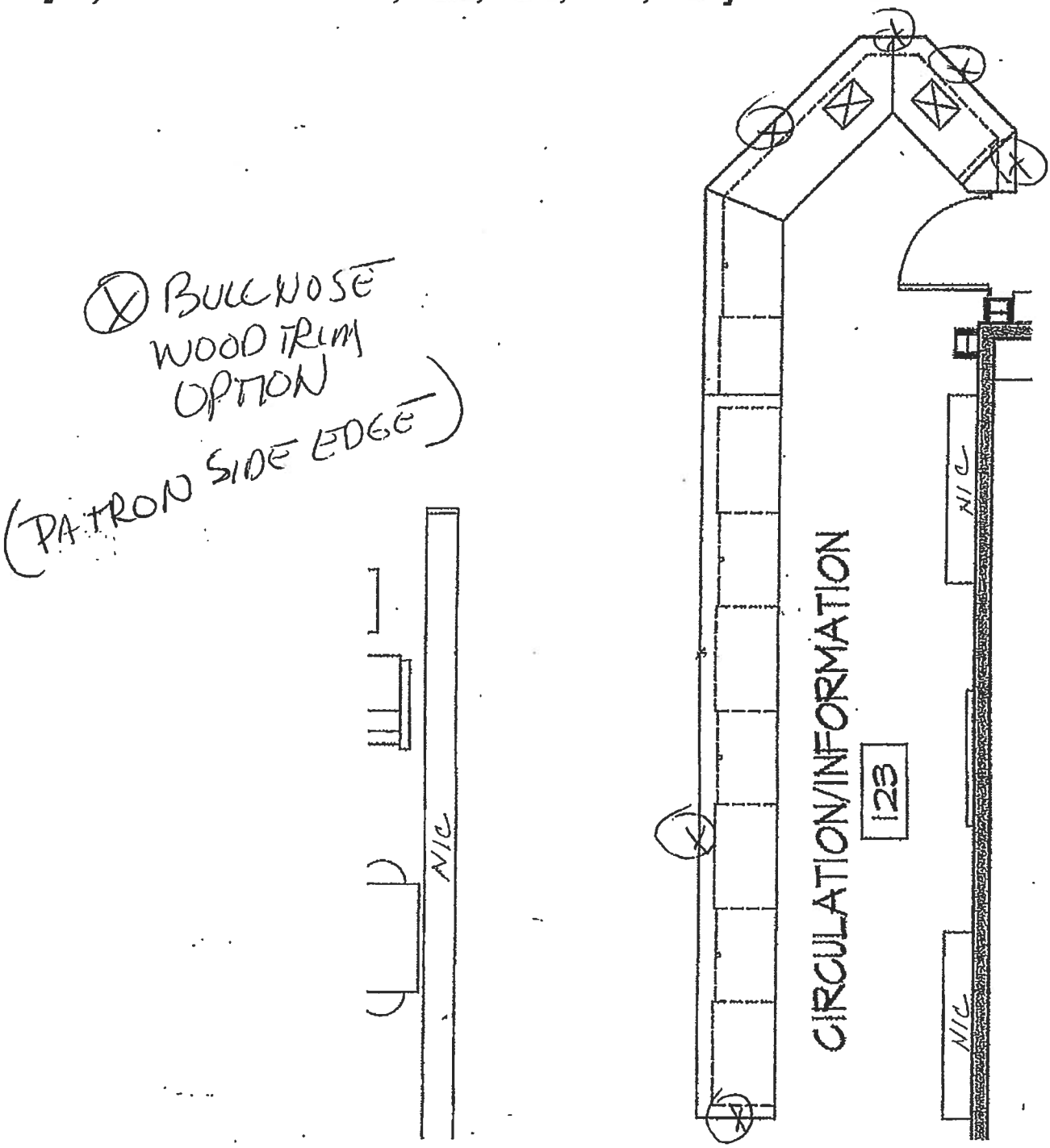

3-18-2013

All dimensions size designations given are subject to verification on job site and adjustment to fit job conditions. C/O OPTION	Cabinetry Unlimited	This is an original design and must not be released or copied unless applicable fee has been paid or job order placed.	Designed: ~~9/6/2012~~ Printed: ~~9/6/2012~~
CIRCULATION DESK RM 123.kit		GREENWOOD PUBLIC LIBRARY	Drawing #: 1

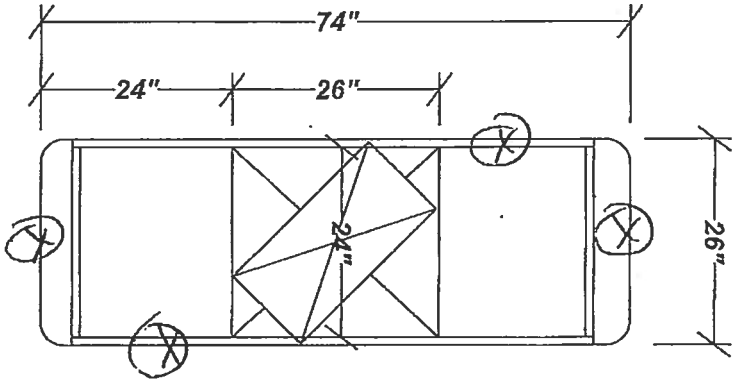

BULLNOSE
X = WOOD TRIM OPTION

WORK COUNTER @ 36" AFF
w/ LAMINATE SUPPORT BRACKETS BELOW

SELFEDGE COUNTER w/ 1-1/2" WOOD APRON BELOW
ALL WALL FINISH, ALL BASE and TRIM ARE BY OTHER
ALL COLUMN COVERS ABOVE and BELOW ARE BY OTHER

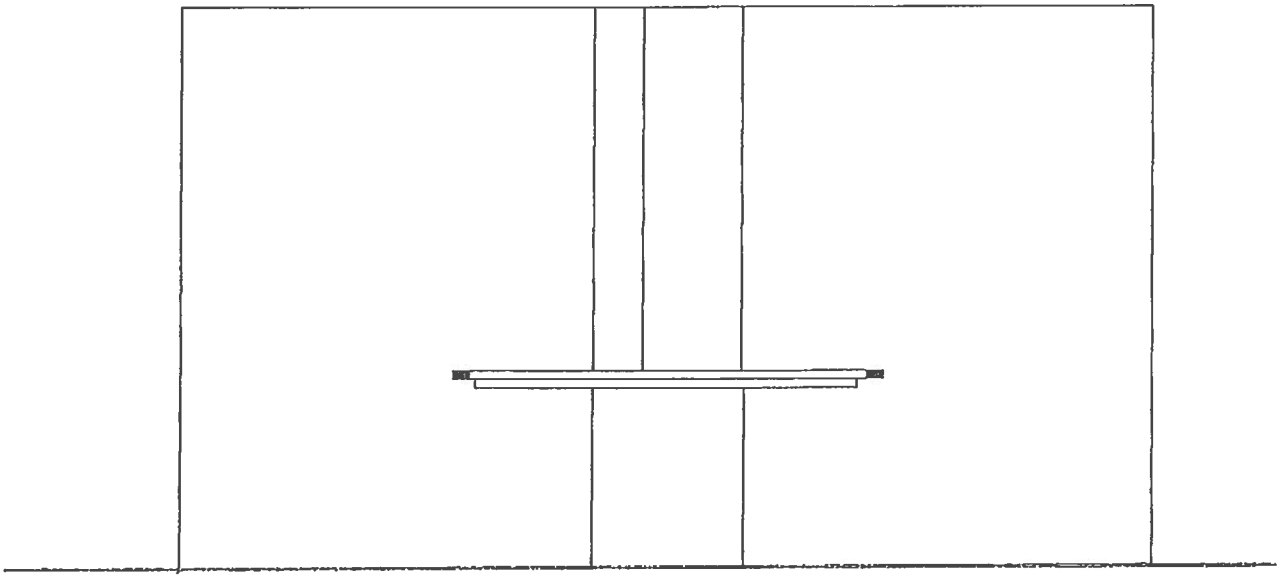

3-18-2013

All dimensions size designations given are subject to verification on job site and adjustment to fit job conditions. C/O OPTION	Cabinetry Unlimited	This is an original design and must not be released or copied unless applicable fee has been paid or job order placed.	Designed: 9/6/2012 Printed: 9/6/2012
COLUMN COUNTER @ 122.kit	GREENWOOD PUBLIC LIBRARY	Drawing #: 1	Scale : 0 1/2" = 1'

(X) BULLNOSE WOODTRIM OPTION

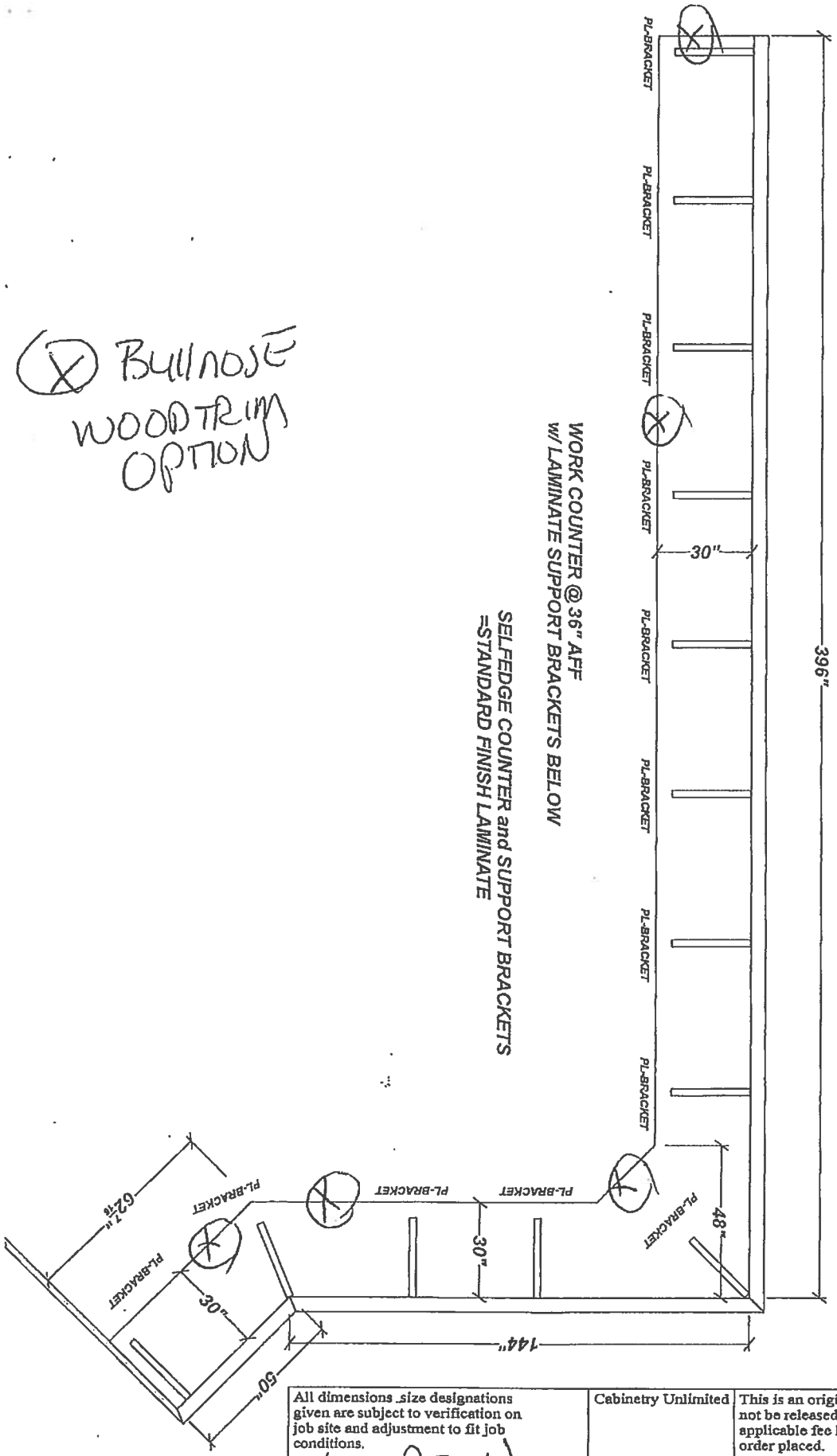

3-18-2013

All dimensions size designations given are subject to verification on job site and adjustment to fit job conditions. C/O OPTION	Cabinetry Unlimited	This is an original design and must not be released or copied unless applicable fee has been paid or job order placed.	Designed: 9/6/201 Printed: 9/6/2012
WORK COUNTER RM 122.kit	GREENWOOD PUBLIC LIBRARY	Drawing #: 1	Scale: 0 1/4" = 1

Gerald G. Friedel, P.E.
Michael R. Wigley, AIA, LEED® AP
Randy B. Duplechain, P.E.
Charles R. Woodward, Jr., LS
Jo Anne Williams, P.E.
W. Zachary Crouch, P.E.
Michael E. Wheedleton, AIA

March 13, 2013
Greenwood Public Library
Mill Street
Greenwood, Delaware
DBF No. 1897B003.005

REF: Change Order Proposal Request

Please provide a Change Order Proposal for the following items:

1. Delete sanitary/napkin dispensers from Job.
2. Delete hollow metal windows at Office 106.
3. Provide hardwood bull nose trim at Laptop Counter~~, and Circulation Counter, Patron side only~~. See attached Detail 1-3/13. See KG email 4/2/13

Thank you,

DAVIS, BOWEN & FRIEDEL, INC

Christopher L Cullen, AIA
Associate

ONE PLAZA EAST, SUITE 200, P.O. BOX 93, SALISBURY, MD 21803-0093 • 410.543.9091
23 NORTH WALNUT ST, MILFORD, DE 19963 • 302.424.1441
106 NORTH WASHINGTON ST, EASTON, MD 21601 • 410.770.4744
401 ACADEMY ST, CAMBRIDGE, MD 21613 • 410.228.7117 115 OLD SOLOMONS IS RD, STE 104, ANNAPOLIS, MD 21401 • 410.897.1004

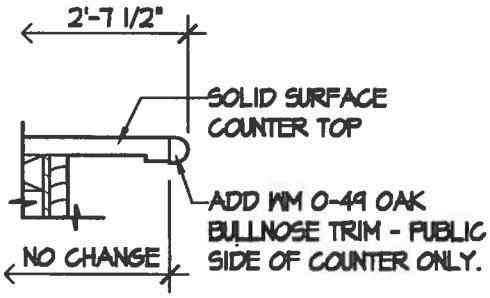

MODIFIES DET E6, E12, E17& J1/A8.4

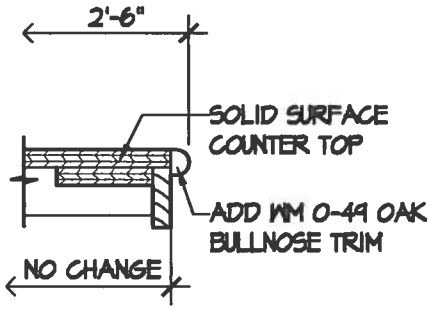

MODIFIES DET J6/A8.4

MODIFY COUNTER EDGE

1 1/2" = 1'-0"

DAVIS
BOWEN &
FRIEDEL, INC.

ARCHITECTS, ENGINEERS & SURVEYORS

SALISBURY, MARYLAND ■ MILFORD, DELAWARE
410.543.9091 302.424.1441

GREENWOOD PUBLIC LIBRARY
100 MILL STREET
GREENWOOD, DELAWARE

COPYRIGHT © 2013

Dwg.No.: 1-3/13

1 OF 1

Date: 3/13/2013 | Scale: NOTED | Proj.No.: 1897B003

Julie Cooper

From: Kathy Graybeal <Kathy.Graybeal@lib.de.us>
Sent: Tuesday, April 02, 2013 12:14 PM
To: Chris Cullen; Pat Brown
Cc: EddieSamsel@yahoo.com; Julie Cooper
Subject: RE: Greenwood Public Library - bullnose trim on circ desk

Okay, Chris...now that I know how the circ desk will really look. I totally get why there was no trim (I went to Home Depot + explored solid surface countertops). Let's leave the trim out. Going to be beautiful without it.

How about going forward when we have an aesthetic/material issue, you/Ed just explain the advantages of your selections. We always assume the motivation is cutting costs. (Sorry, Jules.)

We do want to keep the trim on the laptop counters though. ☺

From March Minutes
7. Owner CO1: Delete sanitary/napkin dispensers from Job. Delete windows at Office **106. Provide hardwood bull nose trim at Laptop Counter and Circulation Counter patron side only. Architect will detail and send to Contractor. 3/20:** Contractor is waiting on the drywall costs, once he has it he will forward the CO to the Architect.

From: Chris Cullen [mailto:clc@dbfinc.com]
Sent: Wednesday, March 20, 2013 4:12 PM
To: Kathy Graybeal; Pat Brown; 'Michael Izzo'; 'Julie Cooper'; adigiuseppe@sussexcountyde.gov; tferet@sussexcountyde.gov; jmcdonnell@townofgreenwood.us; 'Ring Lardner'; EddieSamsel@yahoo.com; 'Jesse Dixon'; 'Frank Wright'
Subject: Greenwood Public Library

Please review and respond to me with any required revisions.

Thank you,

Christopher Lee Cullen AIA | Associate | Salisbury Office
One Plaza East, Suite 200 | Salisbury, MD 21801 | www.dbfinc.com
Office: 410-543-9091| Fax: 410-543-4172 | Email: clc@dbfinc.com
DAVIS BOWEN & FRIEDEL, INC.
ARCHITECTS • ENGINEERS • SURVEYORS

PENINSULA GLASS
679 Horsepond Rd
Dover, De 19901

Phone: 302-883-2984
Fax: 302-883-2986

TO: Richard Y. Johnson & Son, Inc.
18404 Johnson Rd. P.O. Box 105
Lincoln, DE 19960
(302) 422-3732

Change Order Date: March 15, 2013

Contract Date: October 1, 2012

Change Order: # 1 (DEDUCT)

Project Name: Greenwood Public Library

Contract Changes as follows: **(DEDUCT)** Glazing for Interior hollow metal frames #13 and #14 at Office 106. 1/4" Clear tempered glazing, glazing tape and labor to install.
(11pc) 1/4" Clear tempered Glazing - $ 155.00
(3 rolls) Glazing tape - $ 35.00
(2 hours) Labor install - $ 130.00

Original Contract Amount	**$84,000.00**
Net Change by Previous Change Orders	**$.00**
Contract Amount Prior to this Change Order	**$84,000.00**
Proposed New Change Order Amount .....DEDUCT	**- $ 320.00**
New Contract Amount including Proposed Change Order	**$83,680.00**

MMR Associates, Inc.
Peninsula Glass
679 Horsepond Rd
Dover, DE 19901

Don Culver — 3/15/13 Date

Richard Y. Johnson & Son, Inc.
18404 Johnson Rd , P.O. Box 105
Lincoln, DE 19960

Name & Title — Date

RICHARD Y. JOHNSON & SON INC.
General Contractor/Construction Mgrs
P.O. Box 105
LINCOLN, DELAWARE 19960
(302) 422-3732
(302)422-4696 fax

Change Order Proposal 9

Job Phone	Date May 21, 2013
Job Location: Greenwood Public Library	
Greenwood, Delaware	
Job Number:	Architect:
DBF # 1897B003	Davis, Bowen & Friedel, Inc.

TO:

Sussex County
2 The Circle
Georgetown, Delaware 19947

We hereby submit specifications and estimates for:

Unsuitable Soils encountered at Parking Lot (North End)	
Total Unsuitable Soils: 85 cubic yards x $15.00/cubic yards	
Cost:	$1,275.00
RYJ OH&P (10%)	$127.50
Total:	$1,402.50

For the Sum of: One Thousand Four Hundred and Two Dollars & 50 Cents $1,402.50

All material is guaranteed to be as specified. All work to be completed in a workmanlike manner according to standard industry practices. Any alteration or deviation from the above specifications involving extra cost will be executed only upon written orders, and will become an extra charge over and above the estimate. All agreements contingent upon strikes, accidents or delays beyond our control. Owner to carry fire, tornado and other necessary insurance. Our workers are fully covered by Workman's Compensation Insurance. This proposal may be withdraw by us if not accepted within Thirty (30) days.

Accepted By: _____

Date: _____

Jesse Dixon – Project Manager

Daily Report

HILLIS-CARNES ENGINEERING ASSOCIATES, INC.

Salisbury, MD 21804
(410) 749-0940 FAX (410) 896-3478

Date 5-14-13

Report No. — Project No ____ Client RYS Contractor ____

Project Name Greenwood library Weather/Temp clear 60's HCEA Rep. A. Sadberry

A. Description of Work An HCEA engineering tech was on-site to monitor a proof roll on the parking lot sub-grade. The contractor had a fully loaded dump truck drive slowly over the sub-grade. On the west side of the parking lot the tech noticed a failing area about 12'x100' area deflecting and pumping. After investigating the area the tech noticed that the area had 2 feet of saturated material in that area. HCEA recommended to undercut 6 inches and backfill with #2 stone or Recycle concrete. The client didn't want to use the stone due to change order and cost so the second recommendation was to undercut 10 inches and backfill with RC-6 in which the client informed the tech that they want to use select fill to replace the failing material but after going with the undercut in a 12'x20' area the depth of the failing material increased so HCEA recommended to backfill the 12'x20' area with select fill in lifts and roll each lift and for the rest (12'x80') area undercut 1 foot lay geo-tech style cloth and then backfill with select fill. On the east side of the parking lot passed the proof roll and was backfilled with RC-6. Location on page 2
The 12'x20' area was the only part of undercut that was performed today the rest of the area will be attended to 5-15-13 at 7:30am.

B. Tests Performed Proof roll on parking lot

C. Problems/Failing Tests Failing area on the west side of the parking lot recommendations were made.

D. Who Informed of C Above Super.

E. Equipment & Crew 1 tech

Travel Time ____ + On Site Time 9.5 - Lunch — = Total Time ____ hours

Verification Signature Tony D Giuseppe Technician Signature ____

Note All Field Reports Are Subject To Office Review By HCEA Reviewed By/Date ____

DAILY REPORT

HILLIS-CARNES

ENGINEERING ASSOCIATES, INC.

Report No. — Job No. _____ Date: 5-14-13 By: A. Sadberry

PROJECT NAME: Greenwood Library Client: RWJ

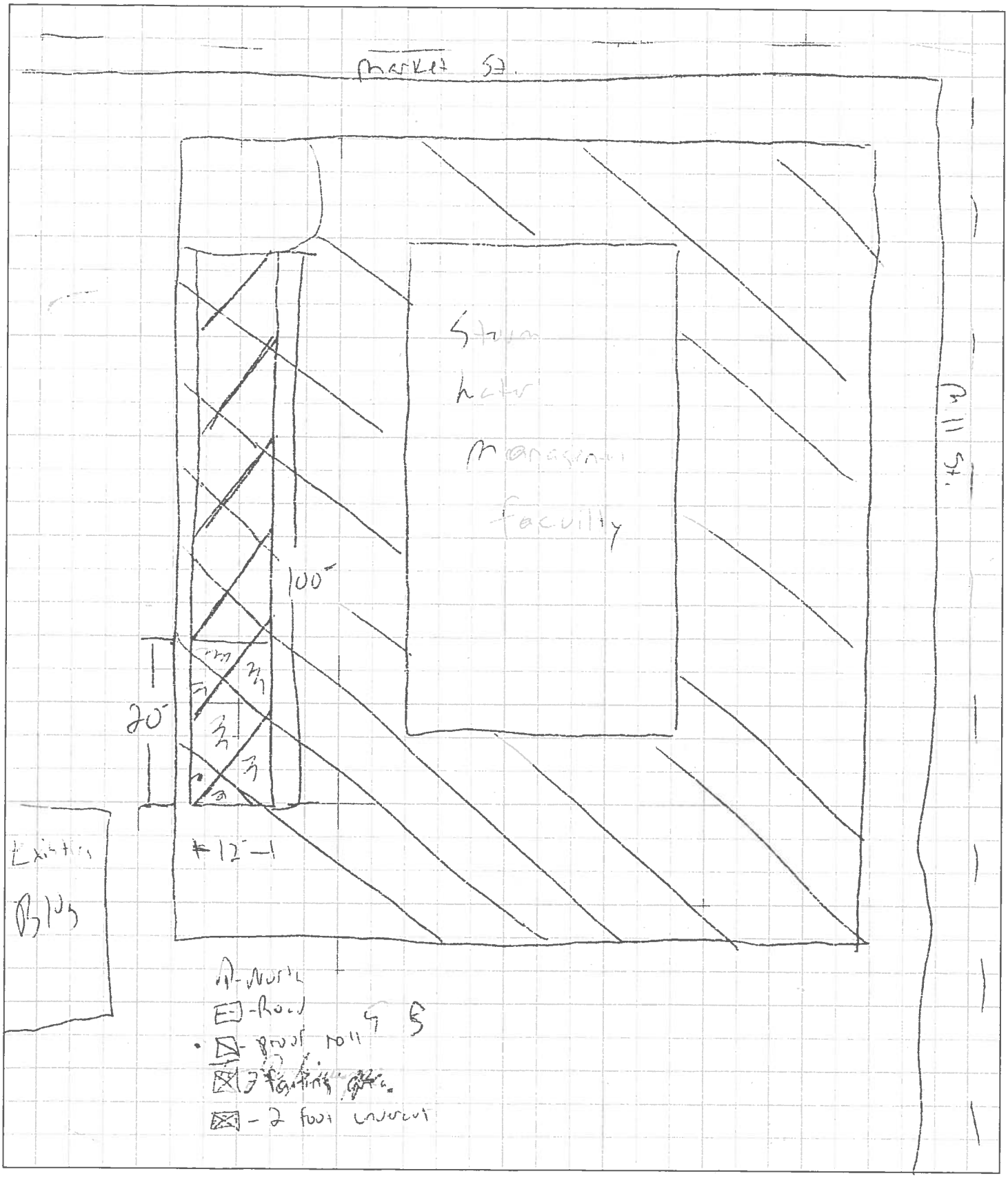

HILLIS-CARNES ENGINEERING ASSOCIATES, INC.

Daily Report

Dover, DE 19901
(302) 744-9855 FAX (302) 744-9160

Date 5-15-13

Report No. ____ Project No 512216 Client Richard W. Johnson + Son Contractor ____

Project Name Greenwood Library Weather/Temp Sunny 60° HCEA Rep. T. Martine

A. Description of Work An HCEA technician arrived on site to test compaction and watched a undercut. The Area that was already undercut upon my arrival had a 15' x 12' x 1' section that had to be taken out. The material was a clay that was wet and pumping. [redacted] This undercut was filled and then [redacted] was covered by a geotextile fabric along the whole undercut, 1 foot below finish grade. All tests that were taken met/exceeded 95% compaction. There were no problems on site or with the fill.

B. Tests Performed density on soil

C. Problems/Failing Tests —

D. Who Informed of C Above —

E. Equipment & Crew nuclear gauge

Travel Time 2.0 + On Site Time 5.5 - Lunch — = Total Time 7.5 hours

Verification Signature [signature] 5-15-13 Technician Signature [signature]

Note All Field Reports Are Subject To Office Review By HCEA Reviewed By/Date ____

ORDINANCE NO. ___

AN ORDINANCE TO AMEND CHAPTER 52, § 52-1 OF THE CODE OF SUSSEX COUNTY TO ADOPT THE BUILDING CONSTRUCTION STANDARDS IN THE INTERNATIONAL BUILDING CODE 2012 EDITION AND THE INTERNATIONAL RESIDENTIAL CODE 2012 EDITION, WITH EXEMPTIONS.

WHEREAS, the International Building Code 2003 Edition, Chapters 1-26 and 35, which governs the construction of commercial buildings, was previously adopted by Sussex County with certain exemptions; and

WHEREAS, International Building Code 2003 Edition has been updated by the International Building Code 2012 Edition; and

WHEREAS, the International Residential Code 2003 Edition, Chapters 1-10, which governs the construction of residential buildings, was previously adopted by Sussex County with certain exemptions; and

WHEREAS, International Residential Code 2003 Edition has been updated by the International Residential Code 2012 Edition; and

WHEREAS, Sussex County desires to update the building standards for both commercial and residential construction by adopting the International Building Code 2012 Edition, Chapters 1-26 and 35, and the International Residential Code 2012 Edition, Chapters 1-10; and

WHEREAS, Sussex County desires to maintain the original exemptions it previously adopted for the International Residential Code as well as exempting IRC § R313 Automatic Fire Sprinkler Systems from the International Residential Code as set forth herein.

NOW, THEREFORE, THE COUNTY OF SUSSEX HEREBY ORDAINS:

Section 1. The Code of Sussex County, Chapter 52, Article I, § 52-1A., <u>Adoption of standards; exemptions</u>, is hereby amended by deleting the language in brackets and inserting the underlined language as follows:

> **"A. The International Building Code (hereinafter "IBC"), Chapters 1 through 26 and Chapter 35, [2003] *<u>2012</u>* Edition and future editions, as promulgated, after 60 days subsequent to the**

INTRODUCED

nonchallenged publication of the edition, is hereby adopted as the building standard for construction in Sussex County as it relates to the following structures: multifamily residential dwellings, assembly occupancy, business occupancy, educational occupancy, hazardous occupancy, factory industrial occupancy, institutional occupancy, mercantile occupancy and storage occupancy."

Section 2. The Code of Sussex County, Chapter 52, Article I, § 52-1C., <u>Adoption of standards; exemptions</u>, is hereby amended by deleting the language in brackets and inserting the underlined language as follows:

"C. The provisions and regulations of the International Residential Code, Chapters 1 through 10, [2003] *<u>2012</u>* Edition and future editions, (hereinafter "IRC"), as promulgated after 60 days subsequent to the nonchallenged publication of the edition, as they relate to one- and two-family dwellings, are hereby adopted as the building standards for construction in Sussex County."

Section 3. The Code of Sussex County, Chapter 52, Article I, § 52-1D., <u>Adoption of standards; exemptions</u>, is hereby amended by deleting the language in brackets and inserting the underlined language as follows:

"D. IRC Exemptions

(1) Carports. Carports are excluded from inspections.

(2) Landings. A landing is not required on the exterior of a sliding door.

(3) Riser height.

(a) Maximum riser height is 8 ¼ inches.

(b) The greatest riser height within any flight of stairs shall not exceed the smallest by more than 3/8 inches, excluding the first and last step of interior stairs, which may have a difference of 5/8 inches.

(4) Tread depth. Minimum tread depth shall be nine inches, including winders.

(5) Foundation anchorage. No anchor bolts will be required at the end of each plate section, excluding corners.

<u>(6) Automatic Fire Sprinkler Systems. IRC § R313 Automatic Fire Sprinkler Systems shall be exempted from one- and two-family dwellings and townhouses.</u>

[(6)]*<u>(7)</u>*Where the provisions of the IRC and the provisions of the Sussex County Code conflict, the provisions contained in the Sussex County Code shall control."

INTRODUCED

Section 4. Effective Date. This Ordinance shall become effective on _____, 2013.

<u>Synopsis</u>

This Ordinance amends Chapter 52, § 52-1 by adopting the International Building Code 2012 Edition, Chapters 1-26 and 35, and the International Residential Code 2012 Edition, Chapters 1-10, exempting therefrom § R313 Automatic Fire Sprinkler Systems from one- and two-family dwellings and townhouses. All exemptions previously adopted and currently set forth in Chapter 52, § 52-1 shall be retained therein.

Deleted text is in brackets. Additional text is underlined and in italics.

INTRODUCED

BUILDING CODE
ANDY WRIGHT
CHIEF OF BUILDING CODE
(302) 855-7860 T
(302) 855-7869 F

Sussex County
DELAWARE
sussexcountyde.gov

May 30, 2013

Sussex County Council
2 The Circle
Georgetown, DE 19947

RE: Updated Code Adoption

Dear Council Members,

As you are aware, on Tuesday June 4, 2013, a Public Hearing will be held pertaining to the proposed updated code adoption. I will present the information to Council during the hearing. I also anticipate several participants from our workshop to testify and answer any of your questions as well.

As a reminder, the main reason we have requested a code update, was due to a possible regression in our rating from ISO because we are using an outdated building code that is 3 editions behind. This regression could ultimately result in higher insurance rates for our county property owners. A copy of ISO's 2012 letter notifying us of their decision, along with Mr. Lawson's memo, is attached.

As a result of our workshop, we are recommending the adoption of the 2012 IBC chapters 1-26 and the 2012 IRC chapters 1-10 with the existing exemptions, plus a new exemption for automatic fire sprinkler systems.

I have attached the current exemptions and the significant changes between our current 2003 IRC and the proposed 2012 IRC for you to reference on Tuesday.

One of the most significant changes in the new code is the reduction of the "wind zone" for coastal Sussex County. This will result in great savings to the

builders and property owners that were previously required to use greater design criteria and costly windows for structures in the wind zone.

In closing, I would like to thank you for your consideration in adopting a newer code and the dedication you provide to the residents of Sussex County.

Respectfully,

Andy Wright
Chief of Building Code

Enclosures (5)

TODD F. LAWSON
COUNTY ADMINISTRATOR

(302) 855-7742 T
(302) 855-7749 F
tlawson@sussexcountyde.gov

Sussex County
DELAWARE
sussexcountyde.gov

Memorandum

TO: Sussex County Council
The Honorable Michael H. Vincent, President
The Honorable Samuel R. Wilson, Jr., Vice President
The Honorable George B. Cole
The Honorable Joan R. Deaver
The Honorable Vance C. Phillips

FROM: Todd F. Lawson
County Administrator

RE: ***BUILDING CODE UPDATE***

DATE: November 30, 2012

During Tuesday's Council meeting, you are scheduled to hear an update on the County's Building Code from Andy Wright.

Recently, the Insurance Services Office, Inc. (ISO) conducted a Building Code Effectiveness Grading Schedule (BCEGS) survey of the County. According to ISO, BCEGS classifications are distributed "to property and casualty insurers to assist in their insurance underwriting and premium development programs for residential and commercial properties."

The ISO survey has resulted in a regression of the County's BCEGS classification. The regression could cause insurance premiums of County residential and commercial property owners to increase. ISO will give the County time to address the issues before a re-classification is implemented.

Please see the attached memo from Andy explaining the classification and the steps the County can take to correct the regression.

In sum, the primary reason for the regression is due to the County's current adoption of the 2003 Edition of the International Residential Code (IRC) (with some exceptions). With the 2003 Edition of the IRC, the County is three Editions behind from the current 2012 Edition. If the County were to adopt the 2012 Edition of the IRC, our classification by the ISO would be greatly improved.

In addition, the 2012 IRC has reduced the Wind Zone restrictions for Delaware which, if adopted, could result in reduced construction costs for property builders and owners. Furthermore, as you will see from the attached list, several County municipalities have adopted the 2012 IRC or are moving towards adoption. Finally, the County also provides inspection services for a number of municipalities using the 2003 IRC.

We are reviewing the 2012 IRC to provide recommendations to Council at a future date. Please note, in the past the County has adopted the IRC with some exceptions, and we anticipate recommending certain exceptions for the 2012 IRC as well.

Please feel free to contact me or Andy Wright with any questions.

TFL/sww

Attachments

pc: Mr. Eddy J. Parker
Mr. Anderson E. Wright

4 B EVES DRIVE SUITE 200 MARLTON, NJ 08053 (856) 985-5600 FAX: (856) 810-9065

October 17, 2012

RECEIVED
OCT 19 2012
SUSSEX COUNTY ADMINISTRATION

Mr. Todd Lawson, County Administrator
Sussex County
2 The Circle
P.O. Box 589
Georgetown, DE 19947

RE: Building Code Effectiveness Grading Schedule Classification Results
Sussex Co, Sussex County, DE

Dear Mr. Lawson:

We wish to thank you and Mr. Anderson E. Wright for the cooperation given to us during our recent Building Code Effectiveness Grading Schedule (BCEGS) survey. Insurance Services Office, Inc. (ISO) is the leading supplier of statistical data, underwriting information, and actuarial analysis to the property/casualty insurance industry in the United States. The BCEGS classifications are distributed by ISO for use by property/casualty insurers to assist in their insurance underwriting and premium development programs for residential and commercial properties. Insurers can use the BCEGS classification number to offer insurance premium discounts to eligible properties in Sussex Co.

ISO has completed its analysis of the building codes adopted by your community and the effort put forth to enforce those codes. The resulting BCEGS Classification is a Class 9 for 1& 2 family residential property and a Class 9 for commercial and industrial property.

The new Classification is a regression from the former Class 8 for 1& 2 family residential property and a Class 8 for commercial and industrial property. The principal reasons contributing to this regression are:

- Out of date building code.
- Cange in method of adoption.
- No enforcement of electrical, mechanical, fuel gas, plumbing and wildland urban interface code.
- Reduction in expenditures for public awareness since last evaluation.
- Change of experience of plan review and inspection personnel since last evaluation.

A revised BCEGS classification would apply to new buildings receiving a Certificate of Occupancy during or after the calendar year in which the revision takes place.

Before we re-classify your community to reflect this change, we would like to know if Sussex Co desires to develop a program to regain Class PL 8 and CL 8. If this letter is

acknowledged by November 19, 2012 advising us that this matter will be reviewed within the next three months we will postpone the implementation of the classification changes.

After review, if it is your decision to begin an improvement program to regain PL Class 8 and CL class 8, we will need to receive, by January 17, 2013 a list of the changes you intend to make. Additionally, we would appreciate your estimate of the amount of time which will be needed to complete each item. No re-classifying action will be taken if changes are implemented to regain the current classification within one year of the receipt of this letter.

We want to highlight the fact that the ISO Building Code Effectiveness Grading program is an advisory insurance underwriting information and rating tool. It is not intended to analyze all aspects of a comprehensive building code enforcement program. It is not for purposes of determining compliance with any state or local law nor is it for making loss prevention or loss safety recommendations.

If you have any questions about the classification that was developed, please let us know.

Sincerely,

Mary Jobst
Community Mitigation Analyst
856-985-5600 ext. 212
800-444-4554 opt. 8 ext. 212
Fax: 800 955-2422
Mjobst@iso.com

cc: Mr. Anderson E. Wright, Building Code Supervisor

Mary Jobst, Community Mitigation Analyst
ISO National Processing Center
4 B Eves Drive
Suite 200
Marlton, NJ 08053

Date:_____

We have reviewed your letter of October 17, 2012 advising the results of the recent survey for Sussex Co. With regards to the regression from our previous classification, we plan to take the following action (please check the appropriate statement below):

- ☐ We will review the results of the survey and decide if Sussex Co, DE will institute programs to regain our previous BCEGS classification number. We understand that we are to notify ISO by November 19, 2012 of our decision.

- ☐ We are in the process of developing an action plan or have implemented an action plan to effect changes that will regain our original class. This plan will be submitted to ISO by January 17, 2013 and will include details of condition(s) to be addressed and a timeline for bringing the plan to completion.

- ☐ Sussex Co has completed the action plan and we are attaching the relevant information to be evaluated by ISO for the purposes of re-classifying Sussex Co.

- ☐ The conditions that have resulted in our less favorable classification are mandates Sussex Co must adhere to. We do not intend to make significant changes in the immediate future to the other aspects of our agency that might improve the BCEGS classification.

- ☐ We have reviewed the results of the survey for Sussex Co and feel our building code enforcement effort at present represents our best interest. We understand that you will contact us in approximately 5-years to update the survey. We can request a new BCEGS survey from ISO if we institute changes that would effect our classification.

- ☐ We would like an ISO BCEGS representative to contact us regarding our recent BCEGS evaluation. The person they should call is _____ at the following phone number (____) _____.

- ☐ Other, please explain.

Name: _____ Title: _____
Street Address: _____
City: _____ State: _____ Zip Code: _____
Phone Number: (____) _____.

TODD F. LAWSON
COUNTY ADMINISTRATOR

Sussex County

ADMINISTRATIVE OFFICE BUILDING
2 THE CIRCLE
P.O. BOX 589
GEORGETOWN, DELAWARE 19947
TEL: 302-855-7742
FAX: 302-855-7749
tlawson@sussexcountyde.gov
sussexcountyde.gov

November 9, 2012

Ms. Mary Jobst
Community Mitigation Analyst
Insurance Services Office, Inc.
4 B Eves Drive, Suite 200
Marlton, NJ 08053

Dear Ms. Jobst:

I am in receipt of your letter dated October 17, 2012.

I understand as a result of the analysis provided by Insurance Services Office, Inc. (ISO), Sussex County's Building Code Effectiveness Grading Schedule (BCEGS) may regress to Class 9 for 1&2 family residential property and Class 9 for commercial and industrial property.

As a result of your analysis, Sussex County will immediately begin corrective measures to regain the current classification. Per your letter, the County asks that ISO postpone any classification changes until such time as the County has addressed these issues.

If you have any questions, please do not hesitate to contact my office or Mr. Andy Wright, Sussex County's Director of Building Code.

Sincerely,

Todd F. Lawson
County Administrator

TFL/sww

pc: Mr. Eddy J. Parker
Mr. Anderson E. Wright

BUILDING CODE
ANDY WRIGHT
CHIEF OF BUILDING CODE
(302) 855-7860 T
(302) 855-7869 F

Sussex County
DELAWARE
sussexcountyde.gov

EXCEPTIONS TO 2003 IRC

IRC 2003	EXCEPTIONS
1. R-309.4 Carports	Carports will be excluded from inspections.
2. R-311.4.3 Landings. There shall be a landing on each side of each side of each exterior door.	A landing is not required on the exterior of a sliding door.
3. R-311.5.3.1 Riser Height. Maximum riser height shall be 7 ¾"	Maximum riser height 8 ¼"
4. R-311.5.3.1 Riser Height Difference. The greatest riser height within any flight of stairs shall not exceed the smallest by more than 3/8"	The first & last step, of interior stairs, may have a difference of 5/8"
5. R-311.5.3.2 Tread Depth. Minimum tread depth shall be 10".	Minimum tread depth 9" including winders.
6. R-403.1.6 Foundation Anchorage. There shall be a minimum of two bolts per plate section with one bolt located not more than 12" from each end of the plate section.	No anchor bolts will be required at the end of each plate section, excluding corners.

BUILDING CODE
ANDY WRIGHT
CHIEF OF BUILDING CODE
(302) 855-7860 T
(302) 855-7869 F

Sussex County
DELAWARE
sussexcountyde.gov

Significant Changes To the International Residential Code

Between the 2003 and 2012 Editions

Wind Design Criteria: (Wind Zone)

2003- In regions where the basic wind speed equals or exceeds 110 miles per hour, (as modified by our "wind zone" map) construction is required to be designed and sealed by a Delaware licensed architect or engineer.

2012- Says the same, but the code has revised their wind speed maps to designate Sussex County to be in a 100 mile per hour area. Therefore, nowhere in the county, do home owners or builders need to make special designs, as long as they meet what is prescribed in the code.

Protection of Openings in Wind Borne Debris Areas-

2003- Requires openings to have special protection on windows by means of plywood panels, impact glass, storm shutters…etc.

2012- Since Sussex County now falls out of the wind borne debris area, no special protection is required.

Location on Lot: (Exterior Walls & Opening Protection)

2003- Exterior walls with a fire separation distance less than 3 feet shall have not less than a one-hour fire resistive rating. Openings shall not be permitted in the exterior wall with a fire separation distance less than 3 feet.

2012- Exterior walls with a fire separation distance less than 5 feet shall have not less than a one-hour fire resistive rating. Openings shall not be permitted in the exterior wall with a fire separation distance less than 3 feet. Openings in exterior walls with a fire separation distance of 3 feet to 5 feet, permitted to be 25% maximum of wall area. Openings in exterior walls with a fire separation distance of 5 feet or greater is unlimited.
Also, the code has added 2 new tables to this section. One is for dwellings without sprinklers and one for dwellings with sprinklers. For dwellings with sprinklers, the code will allow a closer distance.

Dwelling/Garage Protection:

2003- Only "attached" garages are required to be separated from living areas and attic areas by means of not less than ½ -inch gypsum board or equivalent. Openings between garages and residence shall be equipped with solid wood doors not less than 1 3/8 inches in thickness, solid or honeycomb core steel doors not less than 1 3/8 inches thick, or 20-minute fire rated doors.

2012- Same as 2003, but with 2 modifications. 1. As well as attached garages, detached garages located less than 3 feet from a dwelling on the same lot must be separated with not less than 1/2- inch gypsum board or equivalent applied to the interior side of the exterior walls that are within this area. 2. Doors separating garages and dwellings must be provided with a self-closing device.

Ventilation Intake Openings:

2003- Mechanical and gravity outside air intake openings shall be located a minimum of 10 feet from any hazardous or noxious contaminant, such as vents, chimneys, plumbing vents, streets, alleys, parking lots and loading dock, except as otherwise specified in this code. Where a source of contaminant is located within 10 feet of an intake opening, such opening shall be located a minimum of 2 feet below the contaminant source.

2012- Same as 2003, except now a minimum measurement of 3 feet is required for intake openings below the contaminant source.

Hazardous Locations: (Glazing and Wet Surfaces)

2003- Glazing in doors and enclosures for hot tubs, whirlpools, saunas, steam rooms, bathtubs and showers. Glazing in any part of a building wall enclosing these compartments where the bottom exposed edge of the glazing is less than 60 inches measured vertically above any standing or walking surface.

2012- Same as 2003, but now also has a requirement for glazing within 60 inches measured horizontally in a straight line to from the water's edge.

Emergency Escape and Rescue Openings:

2003- Where emergency escape and rescue openings are provided they shall have a sill height of not more than 44 inches above the floor.

2012- Same as 2003, but now has added where to measure. They shall have a sill height of not more than 44 inches measured from the finished floor to the bottom of the clear opening.

Guards and Window Fall Protection:

2003- Had no requirement for fall protection for windows

2012- Window sills in dwellings, where the opening of an operable window is located more than 72 inches above the finished grade or surface below, the lowest part of the clear opening of the window shall be a minimum of 24 inches above the finished floor of the room in which the window is located. Operable sections of windows shall not permit openings that allow passage of a 4-inch-diameter sphere where such openings are located within 24 inches of the finished floor.

Automatic Fire Sprinkler Systems:

2003- None Required

2012- An automatic residential fire sprinkler system shall be installed in townhouses and in one-and two-family dwellings. **Exception**: An automatic residential fire sprinkler system shall not be required when additions or alterations are made to existing townhouses and to one-and two-family dwellings that are not already provided with an automatic residential fire sprinkler system.

Carbon Monoxide Alarms:

2003- None Required

2012- For new construction, an approved carbon monoxide alarm shall be installed outside of each separate sleeping area in the immediate vicinity of the bedrooms in dwelling units within which fuel-fired appliances are installed and in dwelling units that have attached garages. Also, where work requiring a permit occurs in existing dwellings that have attached garages or in existing dwellings within which fuel-fired appliances exist, carbon monoxide alarms shall be provided in accordance with the fore-mentioned section.

Fire Protection of Floors:

2003- None Required.

2012- Floor assemblies, not required elsewhere in this code to be fire-resistance rated, shall be provided with a ½-inch gypsum wallboard membrane, 5/8-inch wood structural panel membrane, or equivalent on the underside of the floor framing member.

As adopted for the 2003 IRC, the 6 exceptions should be implemented in any newer code addition as well. See attached exceptions.

Introduced 3/26/13

District 5

ORDINANCE NO. ___

AN ORDINANCE TO AMEND THE COMPREHENSIVE ZONING MAP OF SUSSEX COUNTY FROM AN AR-1 AGRICULTURAL RESIDENTIAL DISTRICT TO A CR-1 COMMERCIAL RESIDENTIAL DISTRICT FOR A CERTAIN PARCEL OF LAND LYING AND BEING IN INDIAN RIVER HUNDRED, SUSSEX COUNTY, CONTAINING 2.81829 ACRES, MORE OR LESS (Tax Map I.D. 2-34-23.00-Part of Parcels 260.00 and 269.18)

WHEREAS, on the 18th day of March 2013, a zoning application, denominated Change of Zone No. 1728 was filed on behalf of Lighthouse Carillon, LLC; and

WHEREAS, on the ____ day of _____ 2013, a public hearing was held, after notice, before the Planning and Zoning Commission of Sussex County and said Planning and Zoning Commission recommended that Change of Zone No. 1728 be _____; and

WHEREAS, on the ____ day of _____ 2013, a public hearing was held, after notice, before the County Council of Sussex County and the County Council of Sussex County has determined, based on the findings of facts, that said change of zone is in accordance with the Comprehensive Development Plan and promotes the health, safety, morals, convenience, order, prosperity and welfare of the present and future inhabitants of Sussex County,

NOW, THEREFORE,

THE COUNTY OF SUSSEX HEREBY ORDAINS:

Section 1. That Chapter 115, Article II, Subsection 115-7, Code of Sussex County, be amended by deleting from the Comprehensive Zoning Map of Sussex County the zoning classification of [AR-1 Agricultural Residential District] and adding in lieu thereof the designation CR-1 Commercial Residential District as it applies to the property hereinafter described.

Section 2. The subject property is described as follows:

ALL that certain tract, piece or parcel of land lying and being situate in Indian River Hundred, Sussex County, Delaware, and lying southwest of Route 5 (Indian Mission Road) 600 feet west of Route 24 (John J. Williams Highway) and being more particularly described per the attached legal description prepared by Dominic L. Agresta, Land Surveyor, and containing 2.81829 acres, more or less.

This Ordinance shall take effect immediately upon its adoption by majority vote of all members of the County Council of Sussex County, Delaware.

DRAFT

PUBLIC HEARINGS
June 4, 2013

This is to certify that on May 9, 2013 the Sussex County Planning and Zoning Commission conducted public hearings on the below listed application for a Change of Zone. At the conclusion of the public hearing, the Commission moved and passed that this application be forwarded to the Sussex County Council with the recommendations as stated.

Respectfully submitted:

COUNTY PLANNING AND ZONING
COMMISSION OF SUSSEX COUNTY

Lawrence B. Lank
Director of Planning and Zoning

The attached comments relating to the public hearing are findings of the Planning and Zoning Commission based on a summary of comments read into the record, and comments stated by interested parties during the public hearing.

CHANGE OF ZONE #1728 – application of **LIGHTHOUSE CARILLON, LLC** to amend the Comprehensive Zoning Map from AR-1 Agricultural Residential District to a CR-1 Commercial Residential District, to be located on a certain parcel of land lying and being in Indian River Hundred, Sussex County, containing 2.81829 acres, more or less, lying southwest of Route 5 (Indian Mission Road) 600 feet west of Route 24 (John J. Williams Highway)(Tax Map I.D. 2-34-23.00- Part of Parcels 260.00 and 269.18).

The Commission found that on April 26, 2013 the Applicants provided an Exhibit Booklet for consideration which contains a copy of the Application form, a copy of the Deed to the property; a copy of a site plan depicting the boundaries of the rezoning requested; a resume for Richard F. Polk, Professional Engineer of Vista Design, Inc.; a location depiction of the site on the 1868 Beers Atlas; a location depiction of the site on the State Strategies Map; a soils map and legend in reference to the map; a wetlands reference; a site plan depicting the existing zoning in the area; an aerial map depicting the site plan; a site plan depicting wood lands in the area; a copy of the Response from the Applicants to the PLUS comments; a copy of DelDOT comments, dated February 7, 2013; references to utility services; and suggested proposed Findings of Fact.

The Commission found that the County Engineering Department Utility Planning Division provided comments on May 8, 2013 which reference that the site is located in the Long Neck Sanitary Sewer District; that Ordinance 38 construction will be required; that the current System Connection Charge Rate is $3,711.00 per EDU; that there is no sewer service to the parcels at this time; that conformity to the North Coastal Area Planning Study and Amendment No. 1, Expansion Area No. 1, Long Neck Sanitary Sewer District Planning Study will be required; that the parcel areas are in the Sewer District and connection is mandatory; that sewer service is not

available at this time; that in order to receive sewer service, an extension of mainline sewer along the east side of Route 24 must be completed before the parcels can connect to sanitary sewer; that the County does not have a schedule at this time to provide sewer service to the parcel areas; that a shopping center is proposed; that the total EDU for the current proposal is approximately equal to the previous shopping center that received conceptual sanitary sewer plan approval on March 22, 2012 and sewer capacity is available for the project; that the Carillon Square project shall undertake an extension of mainline sewer to serve the project in accordance with sewer planning for the area; that the extension of sewer service to the project would be at the expense of the developer of Carillon Square; that the County requires design and construction of the collection system to meet County Engineering requirements and procedures; that the County Engineer must approve the connection point; that a sewer concept plan must be submitted for review and approval prior to any sewer construction; and that a checklist is available for preparing sewer concept plans.

The Commission found that Gene Bayard, Esquire, with Morris James Wilson Halbrook & Bayard, LLP, and Rich Polk and Brian Zollinger of Vista Design, Inc. were present on behalf of this application and stated in their presentation and in response to questions raised by the Commission that no commercial buildings are planned for this expansion area; that this is the fourth rezoning request for this site; that rezoning were approved in 2000, 2004 and 2009; that a Rite-Aid pharmacy site is being prepared for construction on the existing commercially zoned portion of the site; that a WAWA is proposed to be built on another portion; that the area has a mix of commercial uses, i.e. shopping centers, service/gas stations, medical facilities, convenience store; that the neighborhood is trending toward commercial activities; that the site is irregularly shaped and to squares up the boundaries and to provide access to Route 5; that there are no wetlands on this portion of the site; that there are no reported rare/endangered species on the site; that there are no archaeological features on the site; that no sewer expansion is needed to serve this portion of the site; that they submitted to the PLUS process and heard no objections, and that the PLUS agencies seem to support the application; that DelDOT supports the use and the proposed improvements to the intersection of Route 24 and Route 5, and provides for safe vehicular/pedestrian traffic; that the rezoning will provide access to Route 5 and improves the layout of the project; that there should be no negative impact on the community or property values; that the rezoning complies with the Comprehensive Plan Update and the State Strategies; that a Traffic Impact Study has been submitted for consideration by DelDOT and that a response has not yet been received; that the rezoning allows for corrections to the site plan to improve parking and pedestrian access; that interconnection with Timber Acres Manufactured Home Park is being discussed; that a sewer pump station is planned near the Route 5 entrance; and that the Route 5 entrance lines up with the rear entrance to the Food Lion Shopping Center across Route 5.

The Commission found that there were no parties present in support of or in opposition to this application.

At the conclusion of the public hearings, the Commission discussed this application.

On May 9, 2013 there was a motion by Mr. Johnson, seconded by Mr. Burton, and carried unanimously to defer action for further consideration. Motion carried 5 – 0.

On May 23, 2013 the Commission discussed this application under Old Business.

Mr. Johnson stated that he would move that the Commission recommend approval of Change in Zone Number 1728 for a change in zoning from AR-1 to CR-1 for Lighthouse Carillon, LLC, based upon the record made at the public hearing and for the following reasons:

1. This is an extension of existing CR-1 zoning. The area is approximately 2.8 acres in size. The entire parcel is the site of a commercially-zoned shopping center. By adding this additional area of CR-1 land, the site plan and access to the shopping center will be significantly improved.
2. The rezoning is consistent with nearby zoning and uses. At or near the intersection of Routes 5 and 24, there are 2 other commercially-zoned shopping centers, gas stations, a bank, and other commercial zonings and business and commercial uses.
3. The proposed rezoning will not have any adverse impact upon traffic. Instead, it will improve traffic flow within the planned Carillon Square commercial project and adjacent roadways by allowing a safer means of ingress and egress to the project.
4. The area is served by the Long Neck Sanitary Sewer District and water will be provided by Tidewater Utilities, Inc.
5. The proposed zoning meets the purposes of the CR-1 Zoning District in that it promotes the orderly growth, convenience, order, prosperity and welfare of present and future residents of Sussex County.
6. No parties appeared in opposition to the proposed rezoning.

Motion by Mr. Johnson, seconded by Mr. Burton and carried unanimously to forward this application to the Sussex County Council with the recommendation that it be approved for the reasons stated. Motion carried 5 – 0.

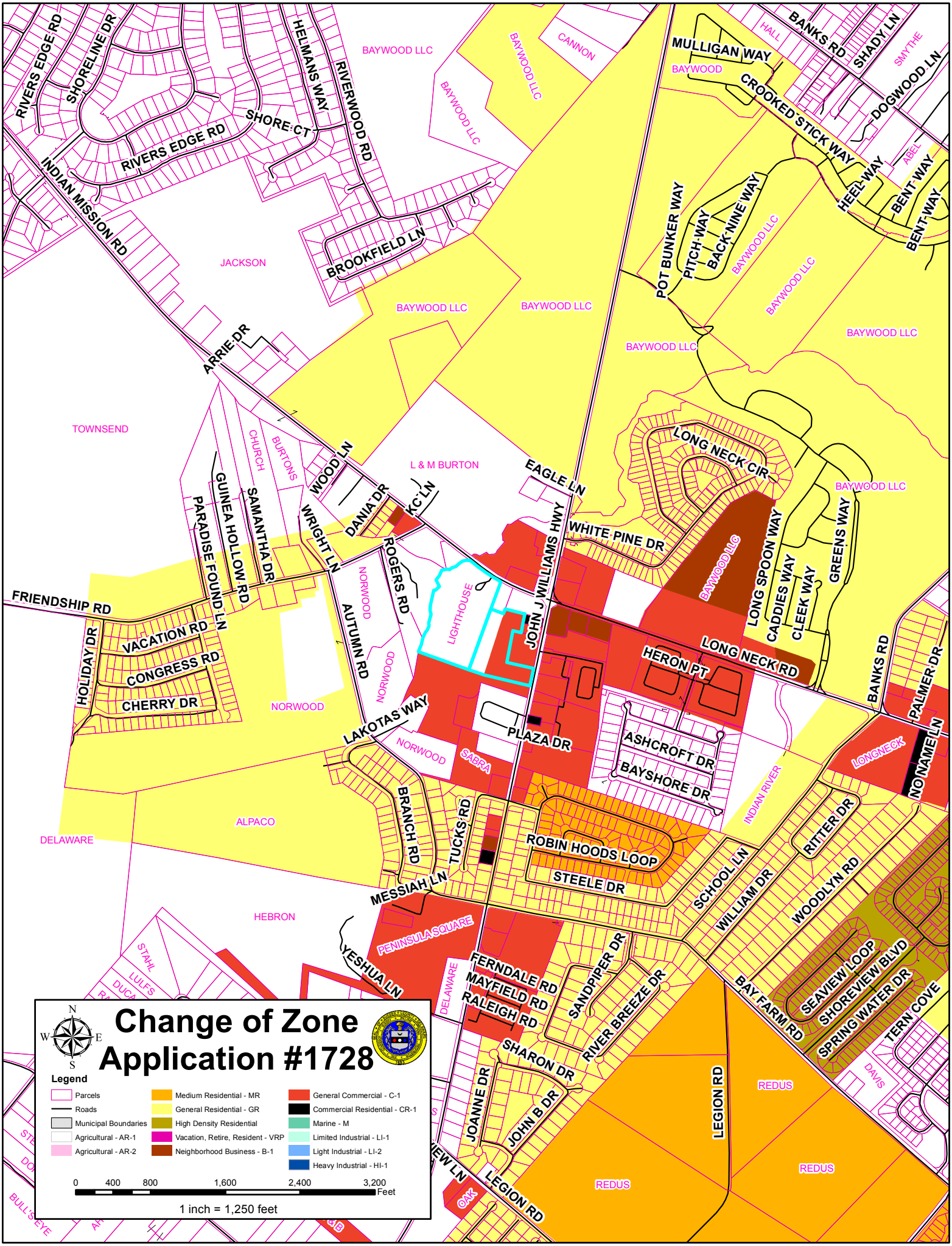
Change of Zone
Application #1728
Legend
Parcels
Roads
Municipal Boundaries
Agricultural - AR-1
Agricultural - AR-2
Medium Residential - MR
General Residential - GR
High Density Residential
Vacation, Retire, Resident - VRP
Neighborhood Business - B-1
General Commercial - C-1
Commercial Residential - CR-1
Marine - M
Limited Industrial - LI-1
Light Industrial - LI-2
Heavy Industrial - HI-1
0 400 800 1,600 2,400 3,200 Feet
1 inch = 1,250 feet
N
S
E
W
RIVERS EDGE RD
SHORELINE DR
HELMANS WAY
RIVERWOOD RD
SHORE CT
INDIAN MISSION RD
BROOKFIELD LN
ARRIE DR
WOOD LN
DANIA DR
KC LN
WRIGHT LN
ROGERS RD
AUTUMN RD
GUINEA HOLLOW RD
SAMANTHA DR
PARADISE FOUND LN
FRIENDSHIP RD
VACATION RD
CONGRESS RD
CHERRY DR
HOLIDAY DR
LAKOTAS WAY
BRANCH RD
TUCKS RD
MESSIAH LN
YESHUA LN
EAGLE LN
JOHN J WILLIAMS HWY
WHITE PINE DR
PLAZA DR
MULLIGAN WAY
CROOKED STICK WAY
BANKS RD
SHADY LN
DOGWOOD LN
HEEL WAY
BENT WAY
POT BUNKER WAY
PITCH WAY
BACK NINE WAY
LONG NECK CIR
LONG SPOON WAY
CADDIES WAY
CLEEK WAY
GREENS WAY
LONG NECK RD
HERON PT
ASHCROFT DR
BAYSHORE DR
ROBIN HOODS LOOP
STEELE DR
SCHOOL LN
WILLIAM DR
RITTER DR
WOODLYN RD
NO NAME LN
PALMER DR
SEAVIEW LOOP
SHOREVIEW BLVD
SPRING WATER DR
TERN COVE
BAY FARM RD
FERNDALE RD
MAYFIELD RD
RALEIGH RD
SHARON DR
SANDPIPER DR
RIVER BREEZE DR
JOANNE DR
JOHN B DR
LEGION RD
OAK
BAYWOOD LLC
CANNON
HALL
SMYTHE
ABEL
JACKSON
TOWNSEND
L & M BURTON
CHURCH
BURTONS
NORWOOD
LIGHTHOUSE
SABRA
ALPACO
DELAWARE
HEBRON
PENINSULA SQUARE
INDIAN RIVER
LONGNECK
REDUS
DAVIS
STAHL
LULFS
BULL'S EYE

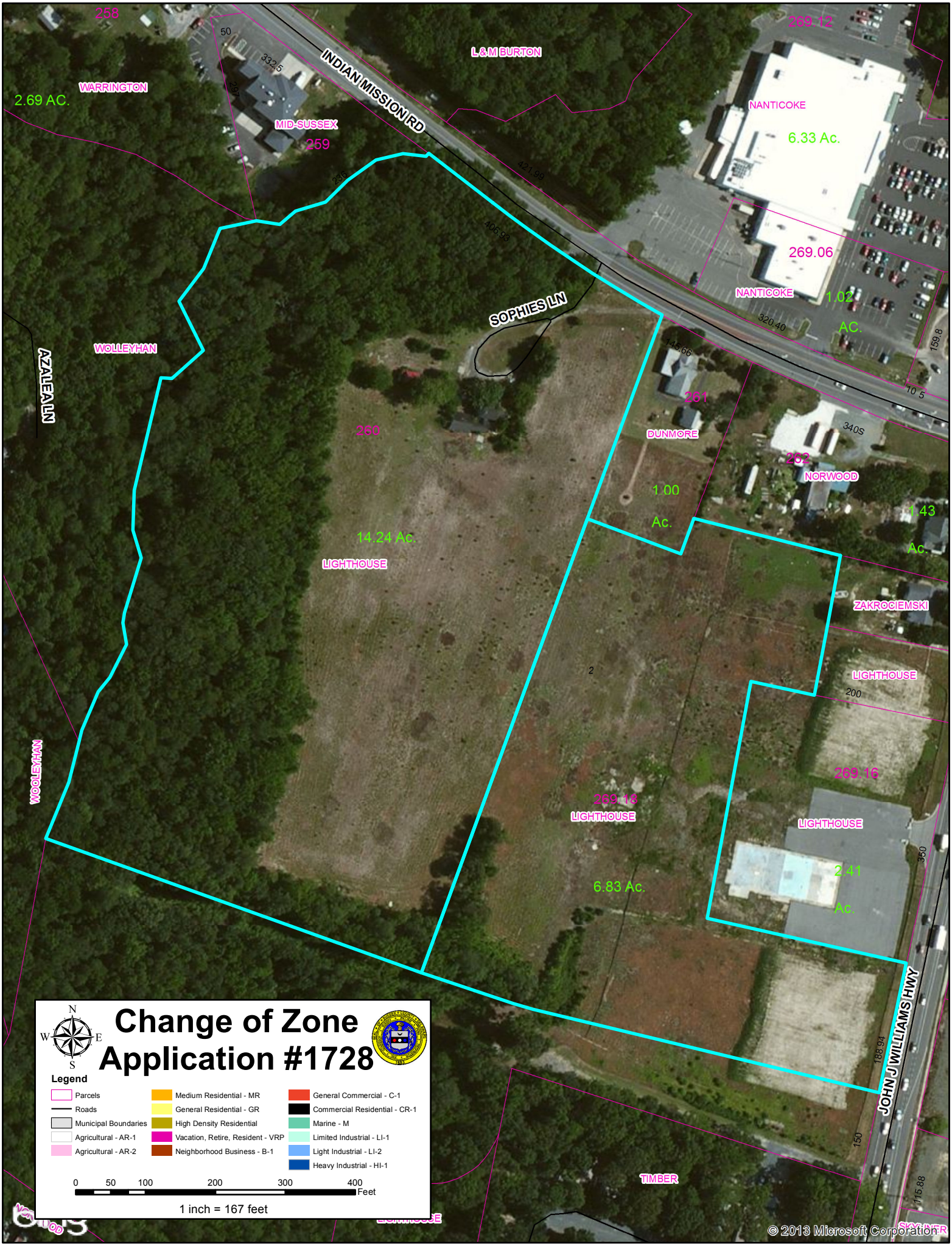
Change of Zone
Application #1728
Legend
Parcels
Roads
Municipal Boundaries
Agricultural - AR-1
Agricultural - AR-2
Medium Residential - MR
General Residential - GR
High Density Residential
Vacation, Retire, Resident - VRP
Neighborhood Business - B-1
General Commercial - C-1
Commercial Residential - CR-1
Marine - M
Limited Industrial - LI-1
Light Industrial - LI-2
Heavy Industrial - HI-1
0 50 100 200 300 400 Feet
1 inch = 167 feet
N
S
E
W
INDIAN MISSION RD
SOPHIES LN
AZALEA LN
WOOLEYHAN
JOHN J WILLIAMS HWY
258
WARRINGTON
2.69 AC.
MID-SUSSEX
259
L & M BURTON
269.12
NANTICOKE
6.33 Ac.
269.06
NANTICOKE
1.02
AC.
WOLLEYHAN
260
14.24 Ac.
LIGHTHOUSE
261
DUNMORE
1.00
Ac.
262
NORWOOD
1.43
Ac.
ZAKROCIEMSKI
LIGHTHOUSE
269.16
LIGHTHOUSE
2.41
Ac.
269.18
LIGHTHOUSE
6.83 Ac.
TIMBER
© 2013 Microsoft Corporation

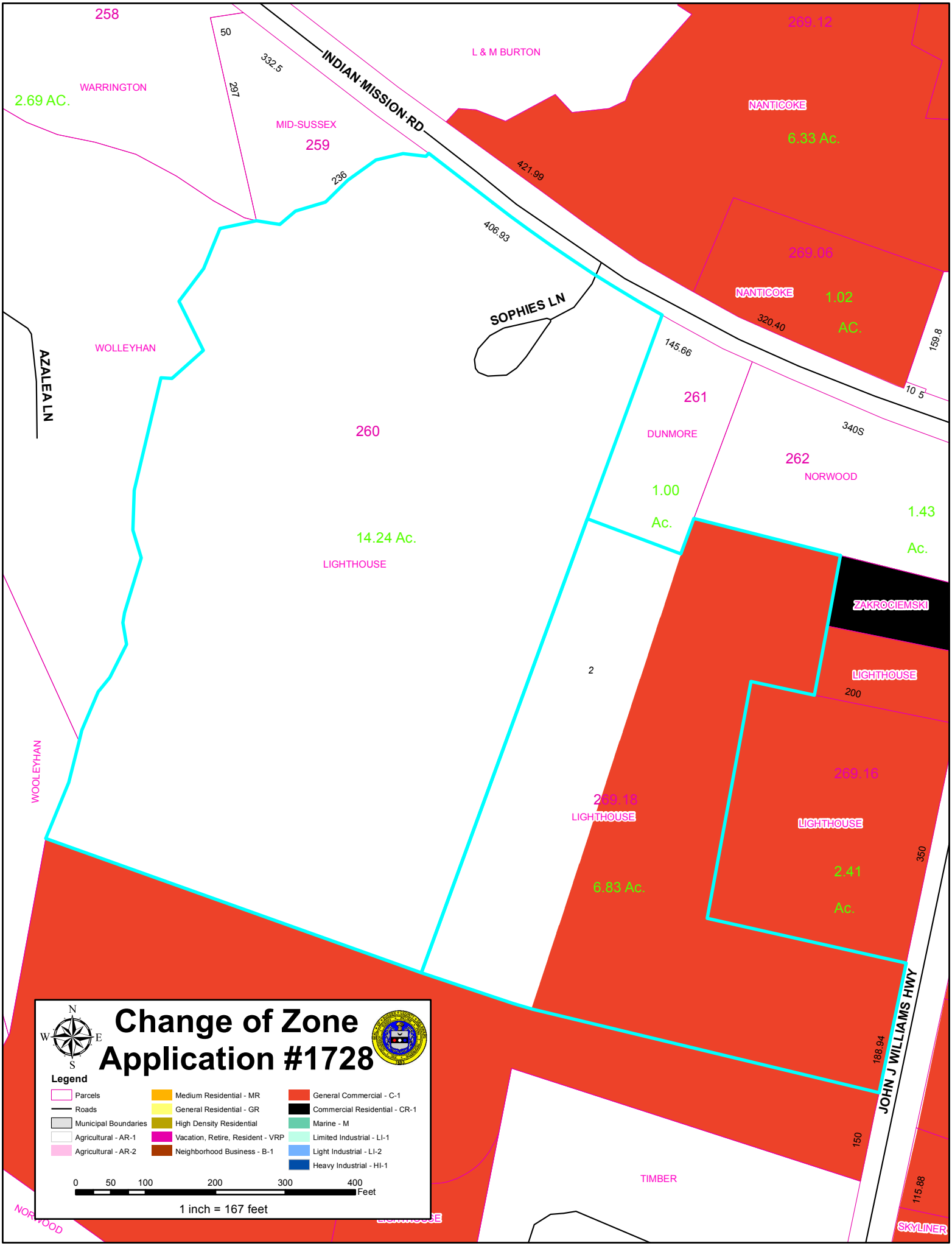
Change of Zone
Application #1728
Legend
Parcels
Roads
Municipal Boundaries
Agricultural - AR-1
Agricultural - AR-2
Medium Residential - MR
General Residential - GR
High Density Residential
Vacation, Retire, Resident - VRP
Neighborhood Business - B-1
General Commercial - C-1
Commercial Residential - CR-1
Marine - M
Limited Industrial - LI-1
Light Industrial - LI-2
Heavy Industrial - HI-1
0 50 100 200 300 400 Feet
1 inch = 167 feet
N
S
E
W
INDIAN MISSION RD
SOPHIES LN
AZALEA LN
JOHN J WILLIAMS HWY
258
WARRINGTON
2.69 AC.
50
332.5
297
MID-SUSSEX
259
236
L & M BURTON
269.12
NANTICOKE
6.33 Ac.
421.99
406.93
269.06
NANTICOKE
1.02
AC.
320.40
159.8
145.66
10 5
WOLLEYHAN
260
14.24 Ac.
LIGHTHOUSE
261
DUNMORE
1.00
Ac.
340S
262
NORWOOD
1.43
Ac.
ZAKROCIEMSKI
2
LIGHTHOUSE
200
269.16
LIGHTHOUSE
2.41
Ac.
350
269.18
LIGHTHOUSE
6.83 Ac.
188.94
150
TIMBER
115.88
WOOLEYHAN
NORWOOD
SKYLINER

Introduced 4/9/13

ORDINANCE NO. _____

AN ORDINANCE TO REPEAL CHAPTER 80, "LOT MAINTENANCE," § 80-3 IN ITS ENTIRETY AND AMEND CHAPTER 115, ARTICLE XXV, "SUPPLEMENTARY REGULATIONS," §§ 115-191.4 AND 115-191.5 OF THE CODE OF SUSSEX COUNTY BY INCLUDING IN § 115-191.4 MINIMUM STANDARDS FOR LOT MAINTENANCE PERTAINING TO PROHIBITED ACCUMULATIONS OF OVERGROWN GRASS AND WEEDS AND TO INCLUDING FAILURE TO COMPLY WITH THE MINIMUM LOT MAINTENANCE STANDARDS PROHIBITING OVERGROWN GRASS AND WEEDS IN THE PENALTY AND ENFORCEMENT PROVISIONS OF § 115-191.5

WHEREAS, Sussex County Code, Chapter 80 currently establishes minimum standards for lot maintenance with respect to prohibited growth, but does not address the penalties and enforcement procedures violations thereof; and

WHEREAS, Sussex County Code, Chapter 115, Article XXV, "Supplementary Regulations," §§ 115-191.4 and 115-191.5 govern "Prohibited accumulations;" and

WHEREAS, this Ordinance shall move the standards for prohibited grass and weed growth currently contained in Sussex County Code, Chapter 80 to Sussex County Code, Chapter 115, Article XXV, § 115-191.4 and shall expand the definition of prohibited growths and accumulations to include grass and weeds greater than 12 inches in height; and

WHEREAS, this Ordinance shall further create penalties and enforcement procedures for the violation of the aforesaid Sussex County Code, Chapter 115, Article XXV, § 115-191.4 by including prohibited grass and weed growth in the existing enforcement provision in Sussex County Code, Chapter 115, Article XXV, § 115-191.5 as set forth herein;

CANCELLED

NOW THEREFORE, THE COUNTY OF SUSSEX HEREBY ORDAINS:

Section 1. Amend Sussex County Code, Chapter 80, "Lot Maintenance," § 80-3, by repealing it in its entirety and deleting the underlined language contained in brackets below as follows:

[§ 80-3 Prohibited growths and accumulations.

A. No person, being the owner or possessor of land or improved premises, shall permit grasses to grow more than 12 inches high.

B. No person, being the owner or possessor of land or improved premises, shall permit grasses or weeds to grow so as to create a nuisance detrimental to adjoining property or to the health or safety of other persons.

C. (Reserved)

D. For purposes of this section:

(1) Weeds do not include ornamental shrubs and trees.]

Section 2. Amend Sussex County Code, Chapter 115, Article XXV, § 115-191.4, Prohibited accumulations, by adding the underlined language as follows:

§ 115-191.4 Prohibited accumulations.

The purpose of this section is to prevent the accumulation of overgrown grass and weeds, rubbish, trash or waste material so as to create an unsightly condition and/or a nuisance detrimental to the use or value of adjoining properties and/or to create a potential fire or safety hazard that

CANCELLED

could endanger the health and safety of the owner, possessor or other persons. In that regard:

A. No person, being the owner or possessor of improved or unimproved lands or premises that are not used for bona fide agricultural purposes shall permit refuse, rubbish, trash or other waste material to be placed or to accumulate upon such lands or premises.

B. No person, being the owner or possessor of improved or unimproved lands or premises that are not used for bona fide agricultural purposes, shall permit grasses or weeds to grow more than twelve (12) inches high upon such lands or premises.

***C*. For the purposes of this section:**

(1) "Waste material" does not include materials accumulated in an orderly fashion for useful purposes, such as firewood, compost piles and building materials in good condition, topsoil and earthfill, except that the accumulation of such material in a haphazard, disorderly or unsightly fashion shall be prima facie evidence of waste and/or a nuisance and/or a detriment to the use and/or value of adjoining property and/or to the health and/or safety of other persons or themselves.

(2) "Weeds" do not include ornamental shrubs and trees.

Section 3. Amend Sussex County Code, Chapter 115, Article XXV, § 115-191.5, Removal by County; recovery of County expenses, by adding the underlined language as follows:

§ 115-191.5 Removal by County; recovery of County expenses.

A. If, within 10 days after due notice by the Director of Planning and Zoning or his designee to the owner or possessor of land or improved premises, weeds, grasses, refuse, rubbish, trash or other waste materials in violation of this section are not removed, the Director or his designee may contract with a third party subcontractor who will cause such weeds, grasses, refuse, rubbish, trash or other waste materials to be removed and may incur any expense in the removal thereof.

B. Any expense of removal incurred by the Director or his designee shall be paid by the owner or possessor of the land or improved premises within 15 days after notice thereof given in compliance with the provisions of § 115-191.1A(1) through (3). If such amount is not paid

CANCELLED

within such time period, such amount, together with a penalty of 10% of such expense and interest on such expenses at 10% per annum, shall be assessed against the land or improved premises and shall, until paid, constitute a lien against such land or improved premises in favor of the County on the filing in the Office of the Recorder of Deeds by the Director of Finance of a certificate of lien setting forth the amount of such expense, including all penalties and interest accrued thereon and the per diem rate of increase in interest thereafter.

C. In addition to any other remedy, the County may file and maintain a civil action for the recovery of such expense of removal and the penalty and interest accrued against the owner or possessor and shall be awarded reasonable attorney's fees and costs of the action by any court having proper jurisdiction over the subject matter.

D. No civil liability shall attach to any act of any contractor or County employee engaged in carrying out the provisions of this section or any of its subsections.

Section 4. Effective Date. This Ordinance shall become effective on immediately upon its passage.

Synopsis

This Ordinance repeals Sussex County Code, Chapter 80, § 80-3 in its entirety. This Ordinance also creates the minimum standards for lot maintenance pertaining to prohibited growth of grass and weeds and the penalties and enforcement procedures for failure to comply with the minimum standards of lot maintenance by amending Sussex County Code, Chapter 115, §§ 115-191.4 and 115-191.5.

Deleted text is noted in brackets. Additional text is underlined.

CANCELLED

302-355-9979 (voicemail)

catsaroundtown@gmail.com

EIN #20-5610111

May 16, 2013

Councilman George Cole

Sussex County Council

Two The Circle

P.O. Box 589

Georgetown, DE 19947

Dear Councilman Cole:

The members of Cats Around Town Society, Inc. would like to thank you for appropriating funds for our group this past year. We continue our mission to help control the feral cat population in Sussex County by providing low cost spay-neuter procedures to lower income persons & caregivers of managed feral colonies. We assist seniors & home bound people by providing transport for their pets to Georgetown where our partnership with DE SPCA enables us to continue to supply these low cost services to Sussex County residents.

We are called upon more often now to assist with food & vaccines to enable people to keep their pets with them rather than turn them out. Our kitten program is in place & together with other area rescue groups we are attempting to keep up with the removal of as many young kits as possible from the outdoor environment & into good homes thru private adoption as well as an out-of-state Petsmart program. All cats & kittens that come to our group are spayed or neutered prior to adoption.

Cats Around Town Society, Inc. (CATS) is a 501c(3) non-profit organization based in Ocean View, DE dedicated to reducing feline over-population. We are 100% volunteer based and do not own any real estate. Except for minimal yearly expenses, nearly all funds raised are spent on spay/neuter procedures & medical necessities for kittens & cats rescued from harmful situations

This past year, the $500 funded to our group paid for 16 – 18 procedures. We specifically targeted an area on RT 17 just S of RT 26 where a line of 4 or 5 abandoned houses had become an attractive dumping ground for unwanted cats. We also removed 12 kittens that had already been born into this colony.

We request $1,000. To be applied for the current year to help us expand the number of residents we can help. As always anything you can do will be greatly appreciated.

Thank you for considering our request for funding.

Clare Mace

Clare Mace, President

Cats Around Town Society, Inc. (CATS)

P.O. Box 541

Ocean View, DE 19970

CAPE HENLOPEN HIGH SCHOOL

1250 KINGS HIGHWAY
LEWES, DE 19958

BRIAN DONAHUE
PRINCIPAL

JANET E. MAULL-MARTIN
ASSISTANT PRINCIPAL

MIKE DMITERCHIK
ASSISTANT PRINCIPAL

MICHAEL YOUNG
ASSISTANT PRINCIPAL

WILLIAM W. (Bill) COLLICK
DEAN OF STUDENTS

ROBERT CILENTO, JR.
ATHLETIC DIRECTOR

MAIN OFFICE (302) 645-7711
FAX (302) 645-1356
GUIDANCE (302) 645-7898
GUIDANCE FAX (302) 645-8413
ATHLETIC OFFICE (302) 645-7099
WELLNESS CENTER (302) 644-2946

April 23, 2013

Dear Supporter of Cape Henlopen High School:

In celebration of the 2013 graduating class from Cape Henlopen High School, the parents are sponsoring an after-graduation party. We are looking to the community to help in whatever way they can. We are all aware of how difficult this economy has been and any contribution you can make will be appreciated. The Virden Center has generously offered to help with the party, and the celebration will be held there on the evening of June 4th. All sponsors will be thanked in the local paper. Thank you for your consideration.

Sincerely,

Brian Donahue, Principal

Teresa Mocci, Committee Representative
Cell: 302-542-7419

Cape Henlopen School District does not discriminate on the basis of race, color, religion, national origin, sex, sexual orientation, marital status, disability or age in its employment, programs, and activities. (Cape Henlopen School District no discrimina en base de la raza, del color, de la religion, del origen nacional, del sexo, de la orinetacion sexual, del esatdo civil, del disability o de la edad en su empleo, programas, y activifdades.) Cathy P. Petitgout, Employee/Student Compliance Officer: OCR/Title IX/504 Office of Human Resources; J. Conrad, Student 504 Compliance Officer, 1270 Kings Highway, Lewes, DE 19958.

To Be Introduced 6/4/13

District 5

ORDINANCE NO. ___

AN ORDINANCE TO GRANT A CONDITIONAL USE OF LAND IN AN AR-1 AGRICULTURAL RESIDENTIAL DISTRICT FOR BOTANIC GARDENS AND RELATED VISITOR CENTER, CONSERVATORY, THEATER, NATURE CENTER AND PARKING TO BE LOCATED ON A CERTAIN PARCEL OF LAND LYING AND BEING IN DAGSBORO HUNDRED, SUSSEX COUNTY, CONTAINING 36.99 ACRES, MORE OR LESS (Tax Map I.D. 2-33-6.00-116.10)

WHEREAS, on the 1st day of May 2013, a conditional use application, denominated Conditional Use No. 1965 was filed on behalf of Southern Delaware Botanic Gardens, Inc.; and

WHEREAS, on the _____ day of _____ 2013, a public hearing was held, after notice, before the Planning and Zoning Commission of Sussex County and said Planning and Zoning Commission recommended that Conditional Use No. 1965 be _____; and

WHEREAS, on the ____ day of _____ 2013, a public hearing was held, after notice, before the County Council of Sussex County and the County Council of Sussex County determined, based on the findings of facts, that said conditional use is in accordance with the Comprehensive Development Plan and promotes the health, safety, morals, convenience, order, prosperity and welfare of the present and future inhabitants of Sussex County, and that the conditional use is for the general convenience and welfare of the inhabitants of Sussex County.

NOW, THEREFORE, THE COUNTY OF SUSSEX HEREBY ORDAINS:

Section 1. That Chapter 115, Article IV, Subsection 115-22, Code of Sussex County, be amended by adding the designation of Conditional Use No. 1965 as it applies to the property hereinafter described.

Section 2. The subject property is described as follows:

ALL that certain tract, piece or parcel of land, lying and being situate in Dagsboro Hundred, Sussex County, Delaware, and lying south of Piney Neck Road (Road 336) 0.5 mile west of Bunting Road (Road 335) and being more particularly described in Deed Book 3336, Page 168 in the Office of the Recorder of Deeds in and for Sussex County, said parcel containing 36.99 acres, more or less.

This Ordinance shall take effect immediately upon its adoption by majority vote of all members of the County Council of Sussex County, Delaware.

PROPOSED

To Be Introduced 06/4/13

District 1

ORDINANCE NO. ___

AN ORDINANCE TO GRANT A CONDITIONAL USE OF LAND IN AN AR-1 AGRICULTURAL RESIDENTIAL DISTRICT FOR A PAINTBALL FACILITY AND OTHER SPORTS RELATED ACTIVITIES TO BE LOCATED ON A CERTAIN PARCEL OF LAND LYING AND BEING IN DAGSBORO HUNDRED, SUSSEX COUNTY, CONTAINING 12.9 ACRES, MORE OR LESS (Tax Map I.D. 1-33-8.00-1.00)

WHEREAS, on the 6th day of May 2013, a conditional use application, denominated Conditional Use No. 1966 was filed on behalf of Steven T. James, dba Precision Paintball; and

WHEREAS, on the _____ day of _____ 2013, a public hearing was held, after notice, before the Planning and Zoning Commission of Sussex County and said Planning and Zoning Commission recommended that Conditional Use No. 1966 be _____; and

WHEREAS, on the ____ day of _____ 2013, a public hearing was held, after notice, before the County Council of Sussex County and the County Council of Sussex County determined, based on the findings of facts, that said conditional use is in accordance with the Comprehensive Development Plan and promotes the health, safety, morals, convenience, order, prosperity and welfare of the present and future inhabitants of Sussex County, and that the conditional use is for the general convenience and welfare of the inhabitants of Sussex County.

NOW, THEREFORE, THE COUNTY OF SUSSEX HEREBY ORDAINS:

Section 1. That Chapter 115, Article IV, Subsection 115-22, Code of Sussex County, be amended by adding the designation of Conditional Use No. 1966 as it applies to the property hereinafter described.

Section 2. The subject property is described as follows:

ALL that certain tract, piece or parcel of land, lying and being situate in Dagsboro Hundred, Sussex County, Delaware, and lying north of Asketum Branch Road (Road 422) 1.0 mile west of Bryan's Store Road (Road 435) and being more particularly described in Deed Book 2814, Page 192 in the office of the Recorder of Deeds in and for Sussex County, said parcel containing 12.9 acres, more or less.

This Ordinance shall take effect immediately upon its adoption by majority vote of all members of the County Council of Sussex County, Delaware.

PROPOSED